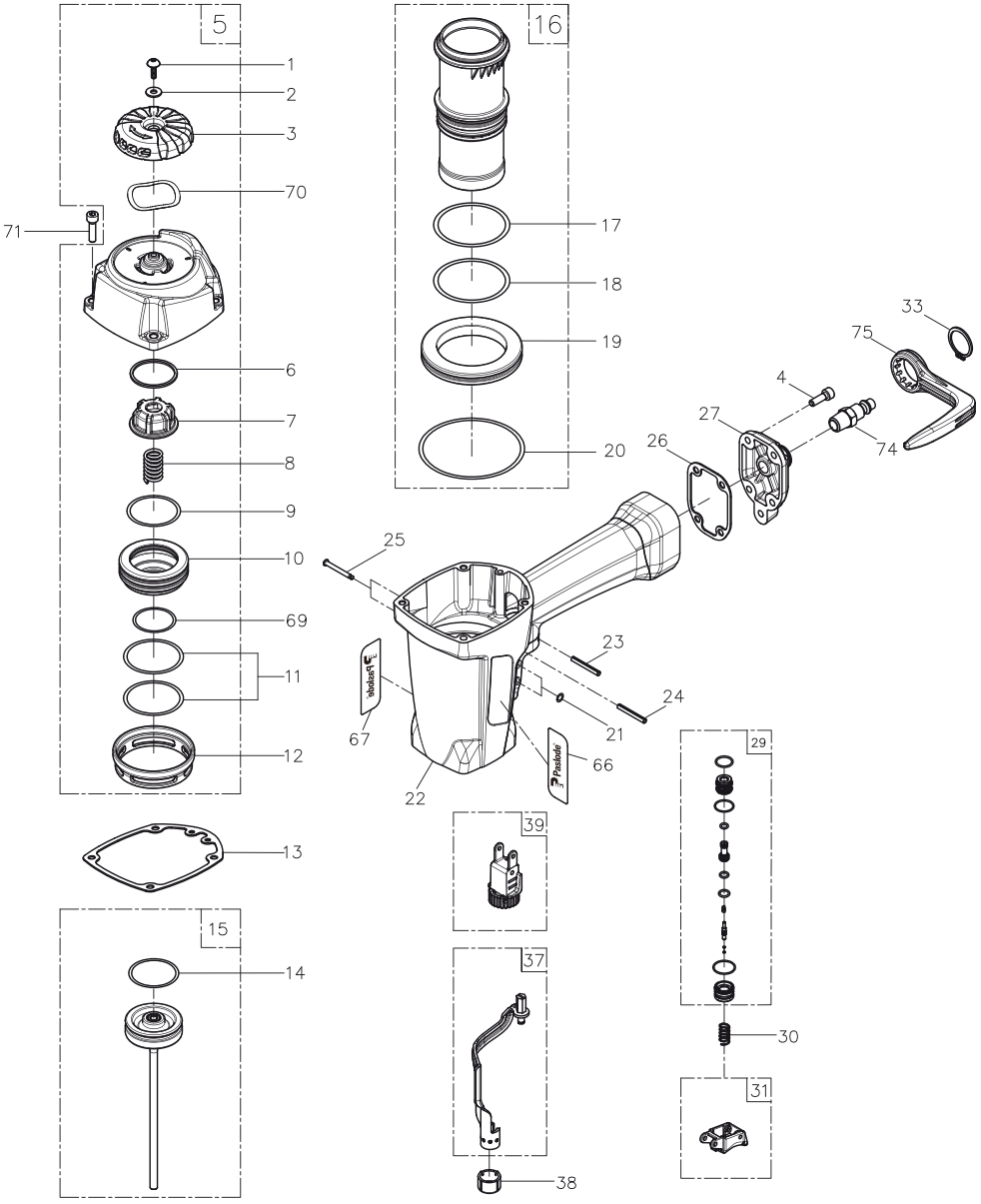
5
1
2
3
70
71
6
7
8
9
10
69
11
12
13
15
14
16
17
18
19
20
33
75
4
27
26
74
25
23
24
21
67
66
22
39
37
38
29
30
31

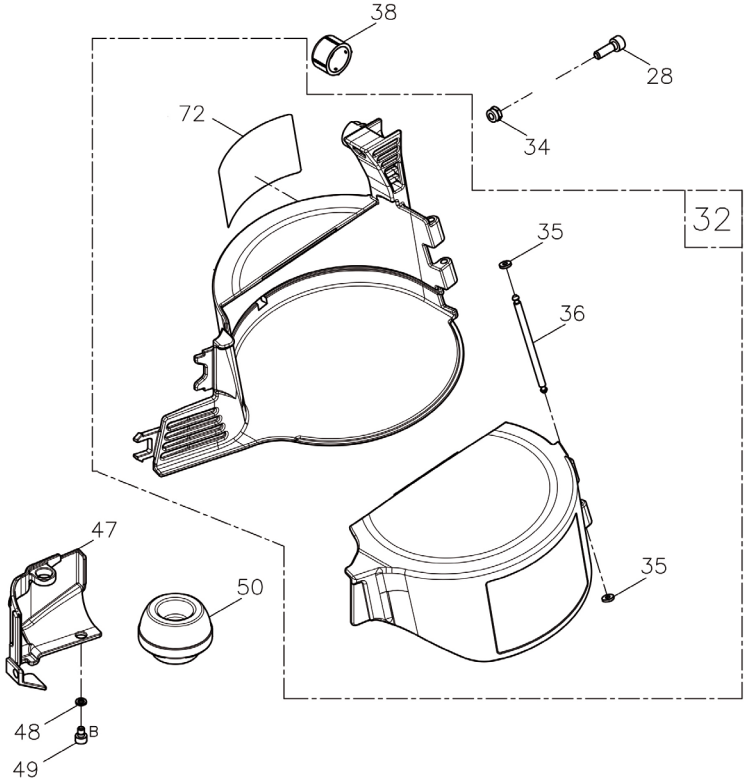
38
28
72
34
32
35
36
47
50
35
48
B
49

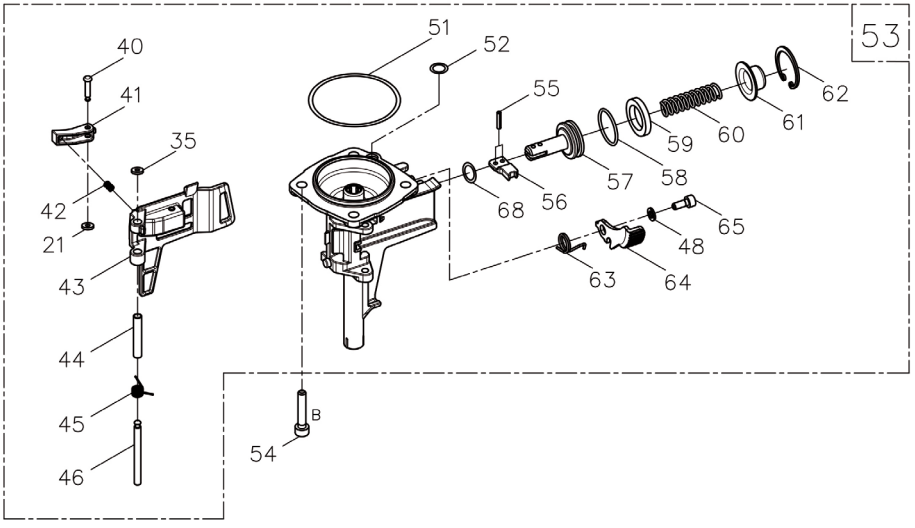
53
51
52
40
41
55
62
61
60
59
35
58
57
42
56
68
21
65
48
43
63
64
44
45
B
54
46

No.	Code	Name	No.	Code	Name
1	617012	SCREW	38	617062	RUBBER PAD
2	617013	FLAT WASHER	39	617063	DEPTH OF DRIVE ASSEMBLY
3	617014	EXHAUST COVER	40	617064	STEP PIN
4	617015	SCREW	41	617065	CHECK PAWL
5	576641	CAP ASSEMBLY	42	617066	COMPRESSION SPRING
6	617017	SPACER	43	617334	DOOR
7	617018	PISTON STOP	44	617068	SLEEVE
8	617019	COMPRESSION SPRING	45	617069	DOOR TORSION SPRING
9	617021	O RING	46	617071	STRAIGHT PIN
10	617022	PISTON HEAD VALVE	47	617072	CONTACT ARM COVER
11	617023	O RING	48	617073	FLAT WASHER
12	617024	COLLAR	49	617074	SCREW
13	617025	CYLIDER CAP SEAL	50	617075	BUMPER
14	617026	O RING	51	617076	O RING
15	617027	DRIVER ASSEMBLY	52	617077	O RING
16	617338	CYLINDER ASSEMBLY	53	617335	NOSE ASSEMBLY
17	617029	O RING	54	617079	SCREW
18	617031	O RING	55	617081	ROLLED PIN
19	617032	CYLINDER RING	56	617082	FEED PAWL
20	617033	O RING	57	617083	FEED PISTON
21	617034	O RING	58	617084	O RING
22	576631	BODY (WITH LABELS)	59	617085	FEED PISTON STOP
23	617036	ROLLED PIN	60	617631	COMPRESSION SPRING
24	617037	ROLLED PIN	61	617087	SPRING COLLAR
25	617038	STEP PIN	62	617088	C RING
26	617039	GASKET	63	617089	TORSION SPRING
27	576647	END CAP	64	617091	STOPPER
28	617042	SCREW	65	617092	SCREW
29	617052	TRIGGER VALVE ASSEMBLY	66	576678	PASLODE LOGO LABEL, LEFT
30	617053	SPRING	67	576682	PASLODE LOGO LABEL, RIGHT
31	575081	BUMP FIRE TRIGGER, ORANGE	68	617095	O RING
31	617054	SEQUENTIAL FIRE TRIGGER	69	617096	O RING
32	617336	MAGAZINE COMPLETE SEQUENTIAL	70	617097	WAVE WASHER
32	617337	MAGAZINE COMPLETE BUMPFIRE	71	617098	SCREW
33	617157	C-RING	72	576694	MODEL LABEL, SEQUENTIAL
34	617057	LOCK NUT	72	576695	MODEL LABEL, BUMPFIRE
35	617058	RUBBER WASHER	74	613617	CONNECTING NIPPLE
36	617059	STEP PIN	75	617156	BELTHOOK
37	617061	SAFETY YOKE			