Oras Vega

Installation and maintenance guide

4-7

8-12

13

14-18

19

1820G

I (ISO 3822)
EN 817
50 - 1000 kPa
0.15 l/s (Eco)
0.29 l/s (300 kPa)
140 kPa (0.2 l/s)
max. +80°C

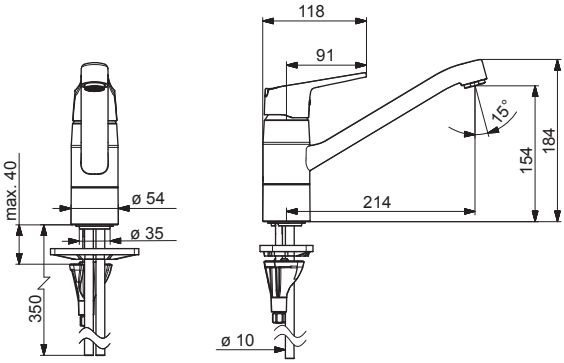

mpi.oras.com/1820G

1820FG, 1820FGG

I (ISO 3822)
EN 817
50 - 1000 kPa

0.17 l/s (Eco)	1820FG
0.29 l/s (300 kPa)	1820FG
150 kPa (0.2 l/s)	1820FG
0.11 l/s (Eco)	1820FGG
0.14 l/s (300 kPa)	1820FGG
145 kPa (0.1 l/s)	1820FGG

max. +80°C

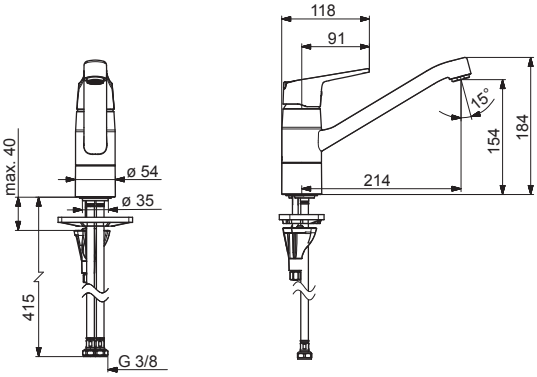

mpi.oras.com/1820FG

1825G

I (ISO 3822)
EN 817
50 - 1000 kPa
0.15 l/s (Eco)
0.29 l/s (300 kPa)
145 kPa (0.2 l/s)
max. +80°C

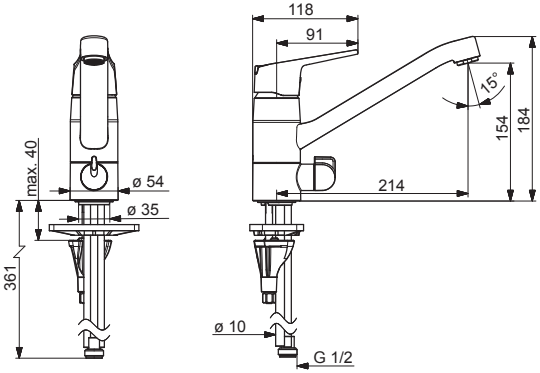

mpi.oras.com/1825G

1825FG, 1825FGG

I (ISO 3822)
EN 817
50 - 1000 kPa

0.17 l/s (Eco)	1825FG
0.29 l/s (300 kPa)	1825FG
150 kPa (0.2 l/s)	1825FG
0.11 l/s (Eco)	1825FGG
0.14 l/s (300 kPa)	1825FGG
145 kPa (0.1 l/s)	1825FGG

max. +80°C

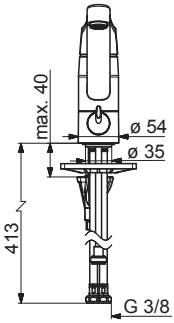

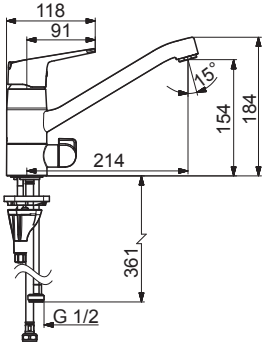

mpi.oras.com/1825FG

1832FG

I (ISO 3822)
EN 817
50 - 1000 kPa
0.07 l/s (Eco)
0.16 l/s (300 kPa)
90 kPa (0.1 l/s)
max. +80°C

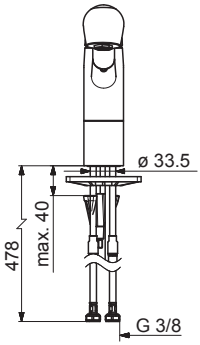

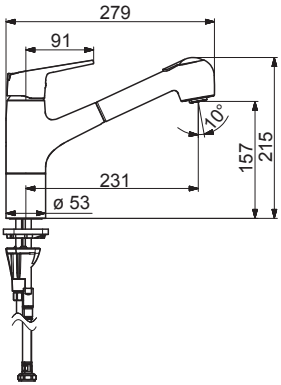

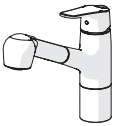

mpi.oras.com/1832FG

1828G

I (ISO 3822)
EN 817
50 - 1000 kPa
0.07 l/s (Eco)
0.17 l/s (300 kPa)
105 kPa (0.1 l/s)
max. +80°C

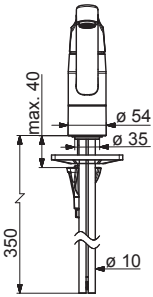

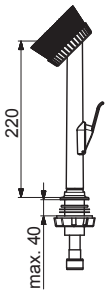

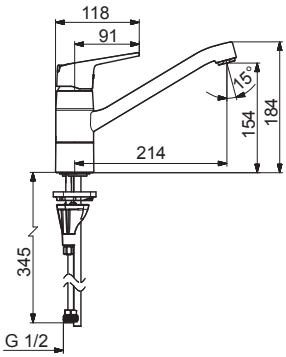

mpi.oras.com/1828G

1829G

I (ISO 3822)
EN 817
50 - 1000 kPa
0.07 l/s (Eco)
0.17 l/s (300 kPa)
105 kPa (0.1 l/s)
max. +80°C

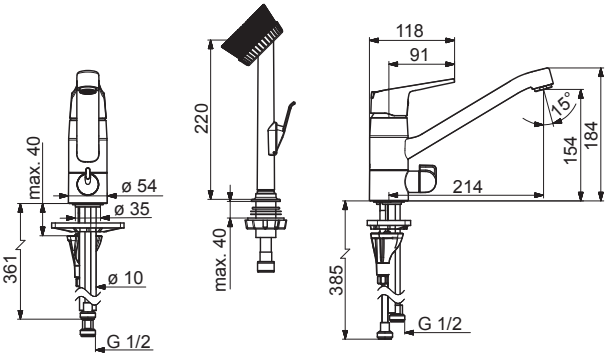

mpi.oras.com/1829G

1821FG

I (ISO 3822)
EN 817
50 - 500 kPa
0.08 l/s (300 kPa w/Reducer)
max. +80°C

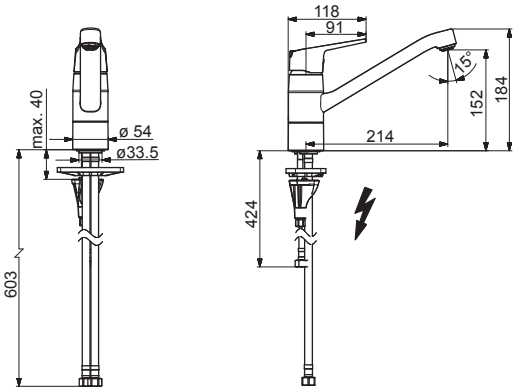

mpi.oras.com/1821FG

1838FG , 1838FG-33

I (ISO 3822)
EN 817
50 - 1000 kPa

0.15 l/s (Eco)	1838FG
0.27 l/s (300 kPa)	1838FG
170 kPa (0.2 l/s)	1838FG
0.11 l/s (Eco)	1838FGG
0.14 l/s (300 kPa)	1838FGG
145 kPa (0.1 l/s)	1838FGG

max. +80°C

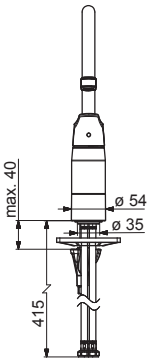

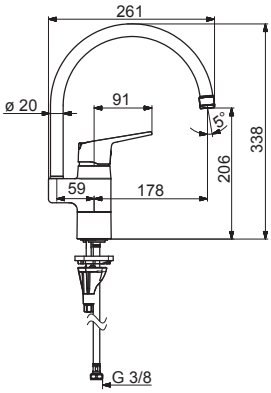

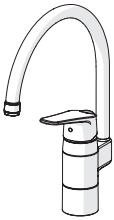

mpi.oras.com/1838FG

1839FG , 1839FG-33 , 1839FGG

I (ISO 3822)
EN 817
50 - 1000 kPa

0.15 l/s (Eco)	1839FG
0.27 l/s (300 kPa)	1839FG
170 kPa (0.2 l/s)	1839FG
0.11 l/s (Eco)	1839FGG
0.14 l/s (300 kPa)	1839FGG
145 kPa (0.1 l/s)	1839FGG

max. +80°C

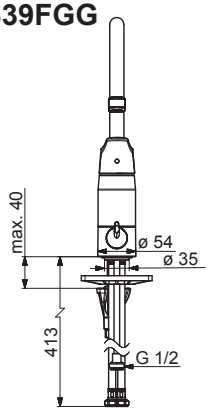

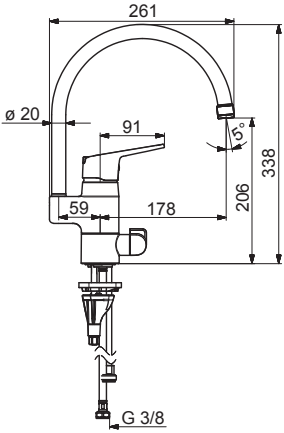

mpi.oras.com/1839FG

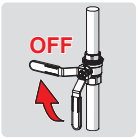

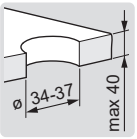

4

max. 1600 kPa

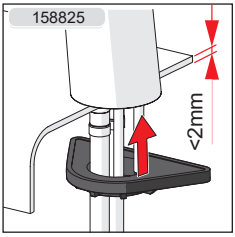

1

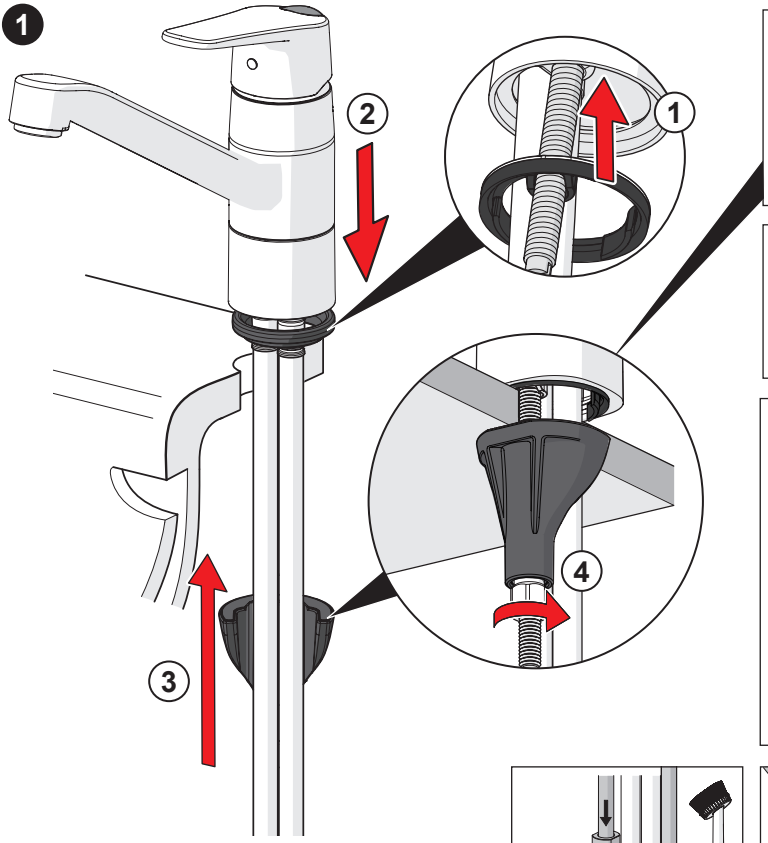

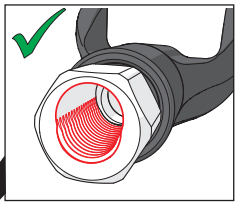

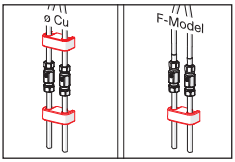

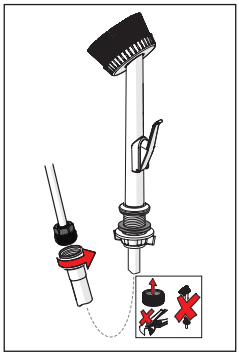

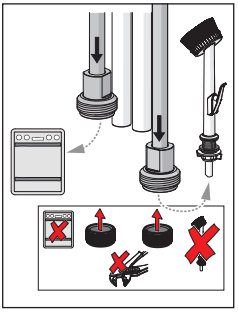

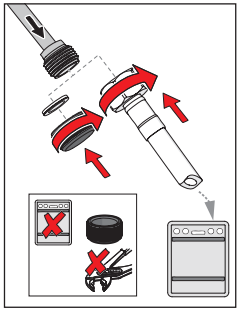

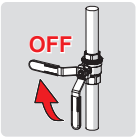

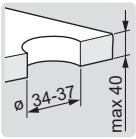

③

⑤

⑥

max.
1600 kPa

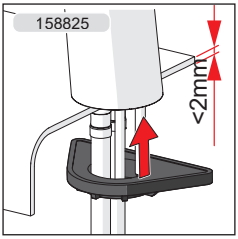

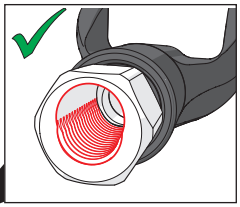

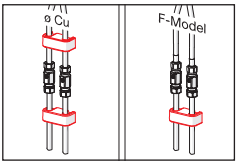

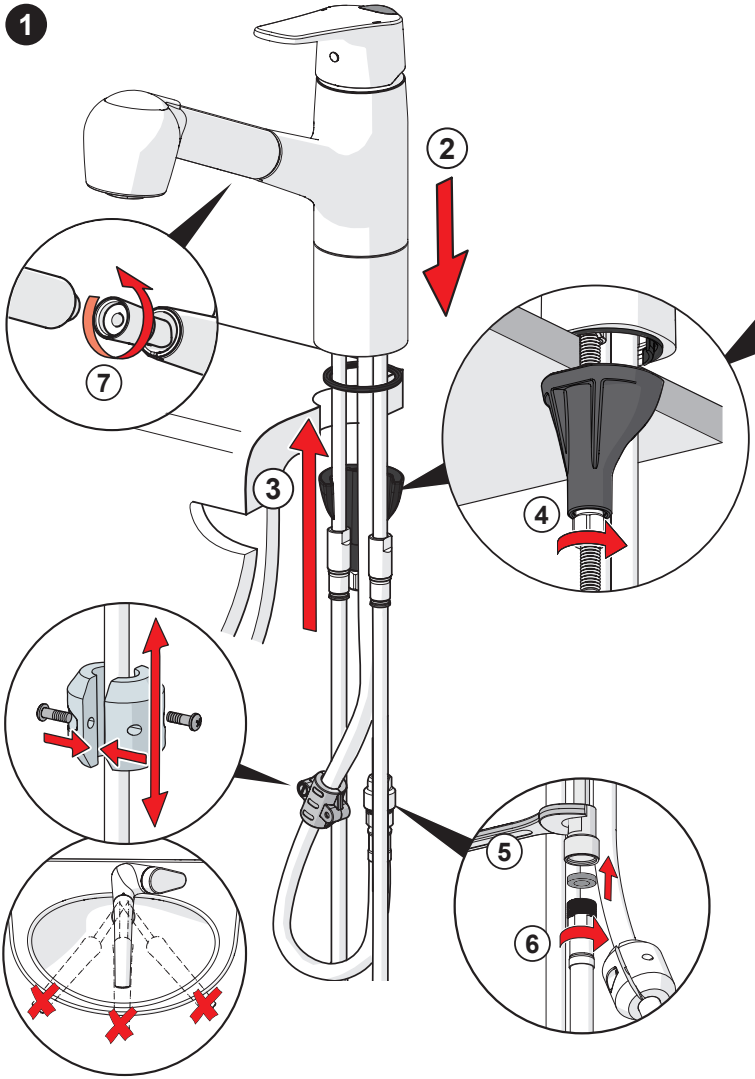

1

max.
1600 kPa

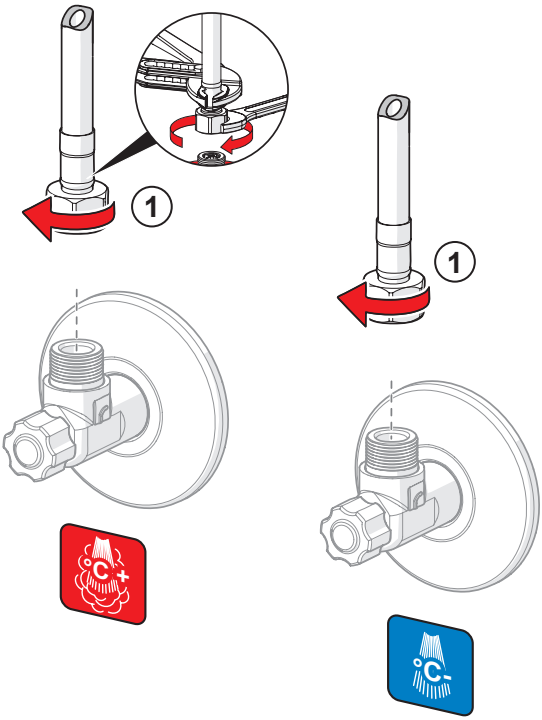

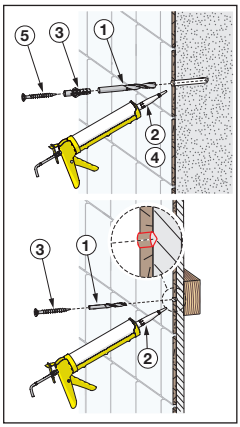

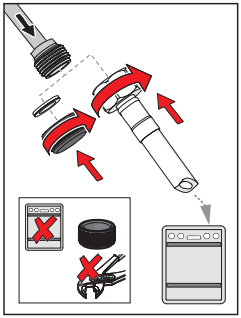

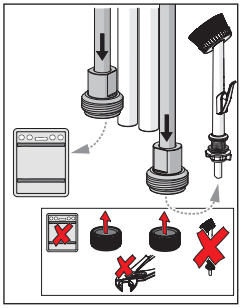

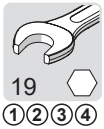

2

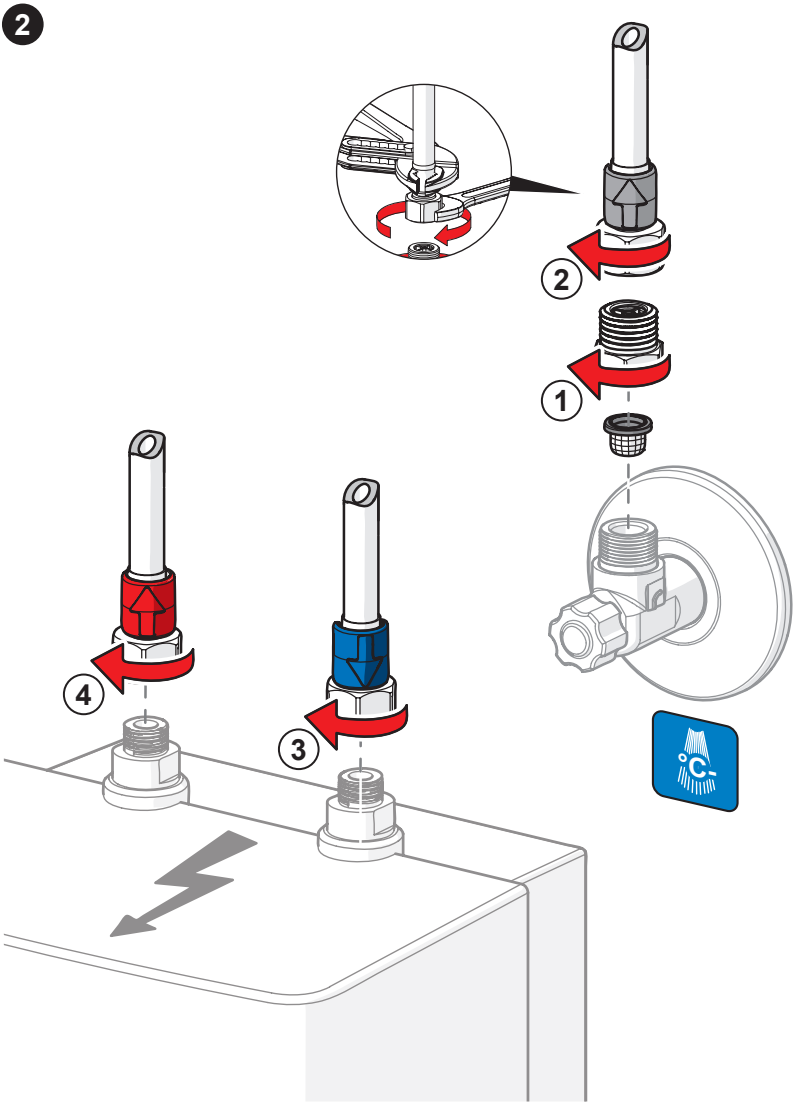

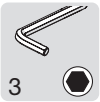

1

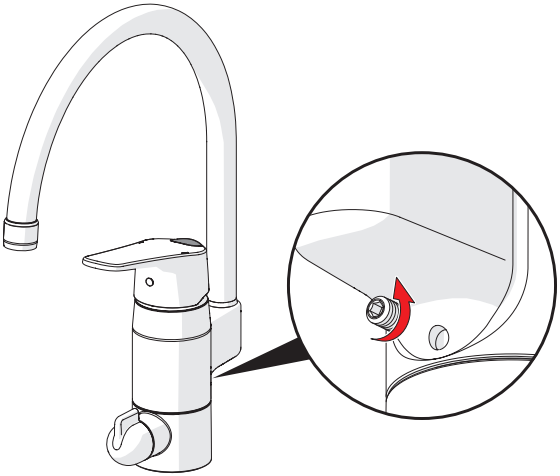

2 A

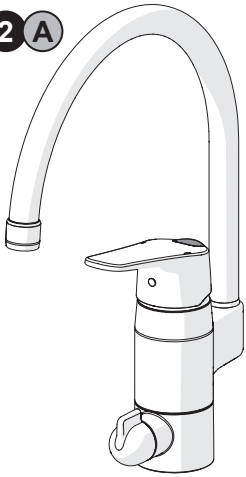

B

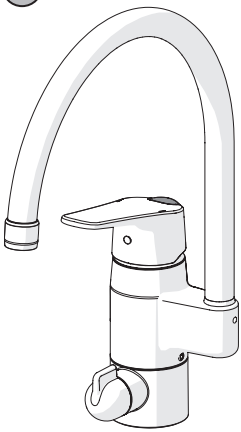

C

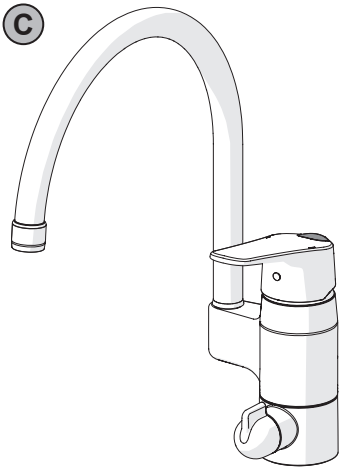

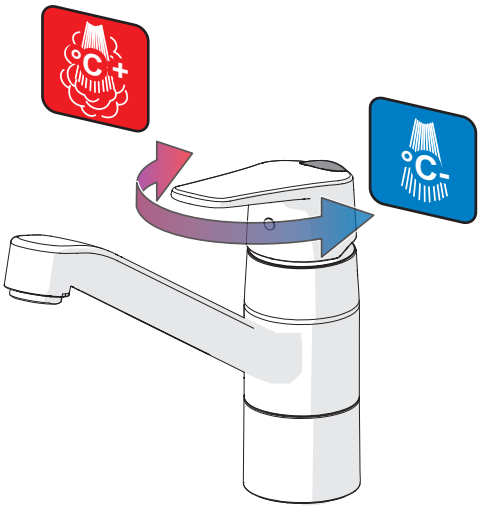
°C +
°C -

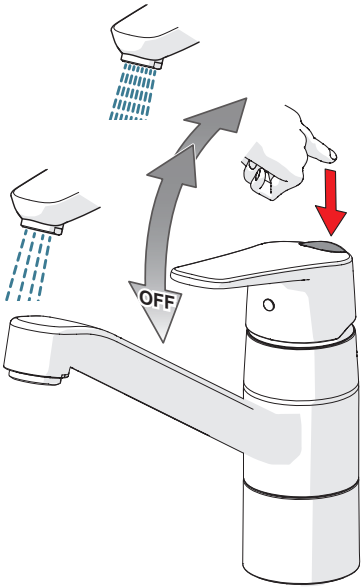
OFF

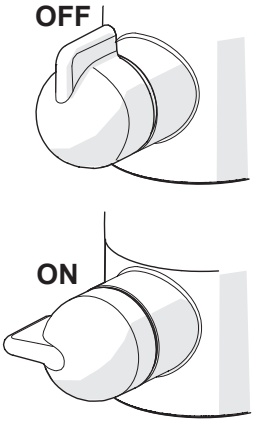
OFF
ON

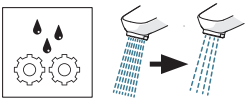

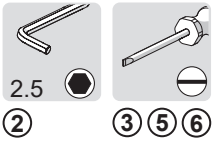
2.5
②
③ ⑤ ⑥

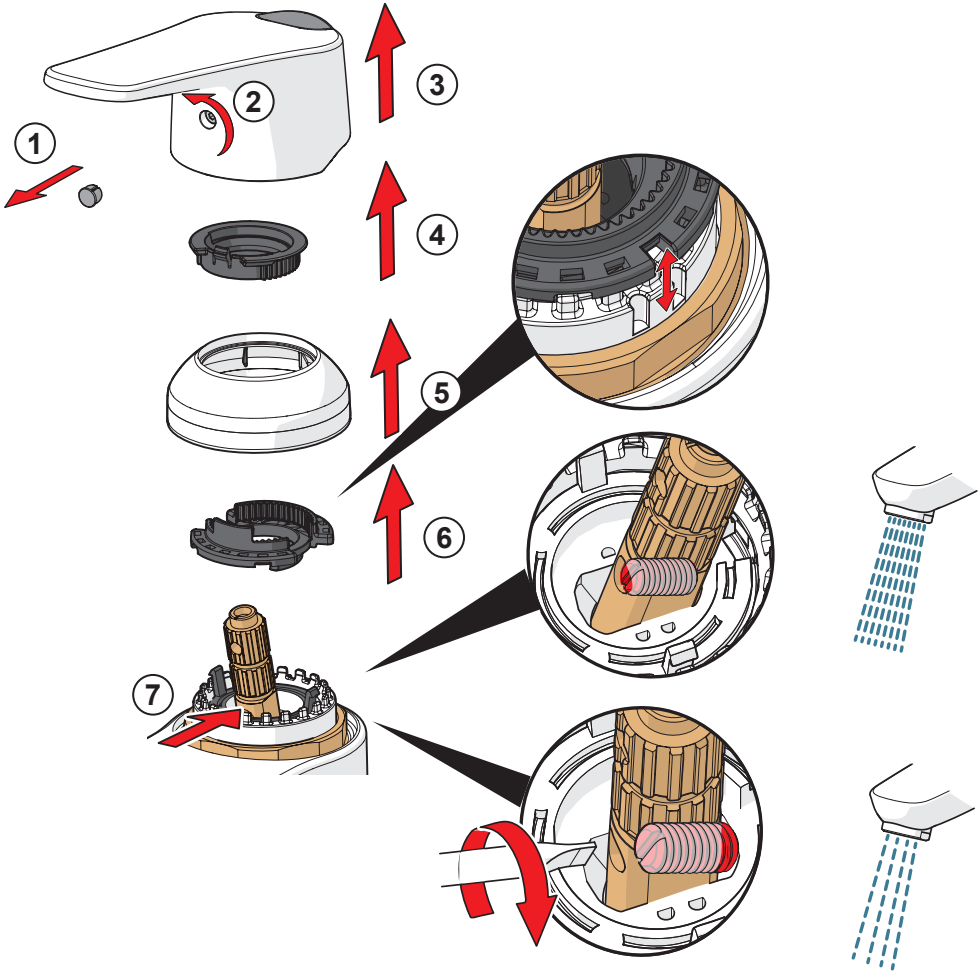
1
2
3
4
5
6
7

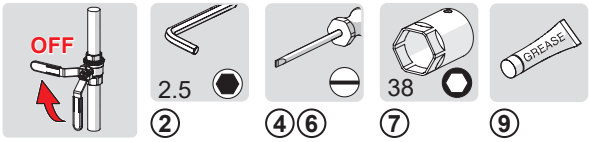
OFF
2.5
38
GREASE
②
④⑥
⑦
⑨

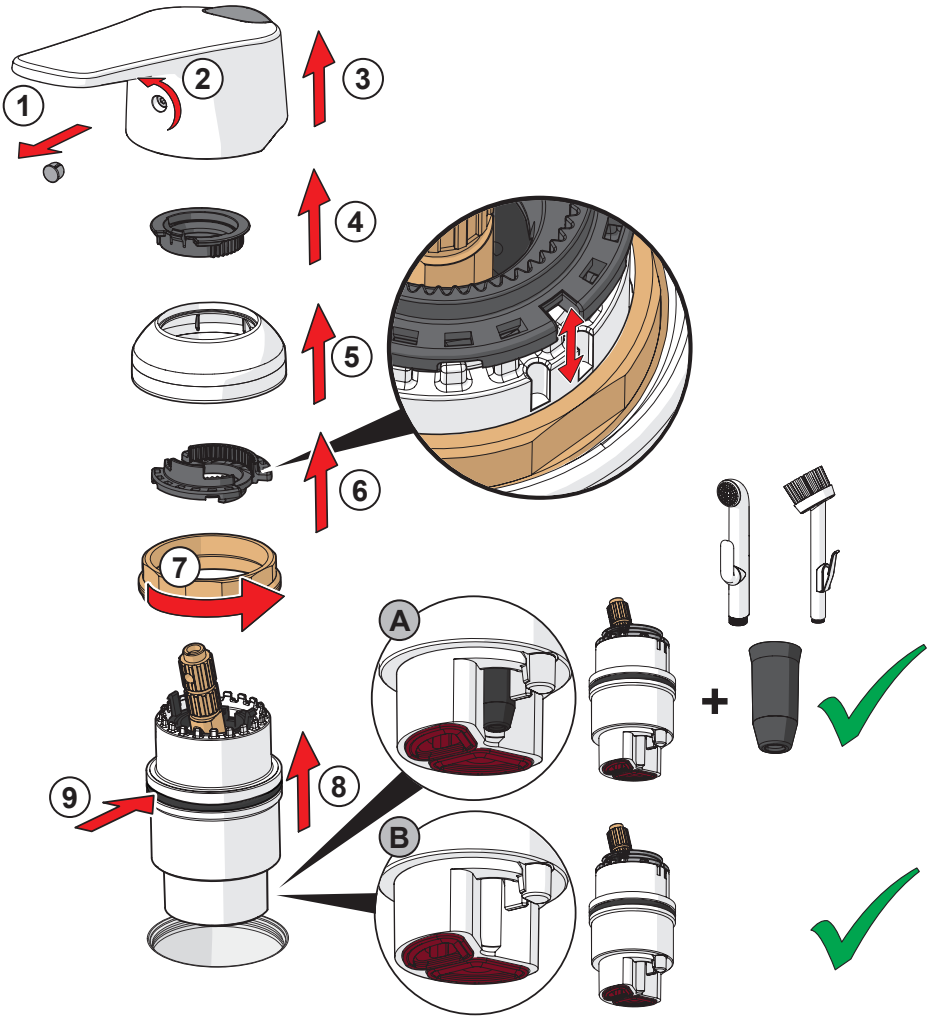
1
2
3
4
5
6
7
8
9
A
B

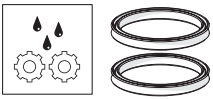

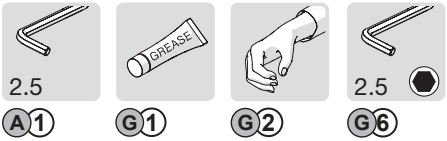
2.5
GREASE
2.5
A 1
G 1
G 2
G 6

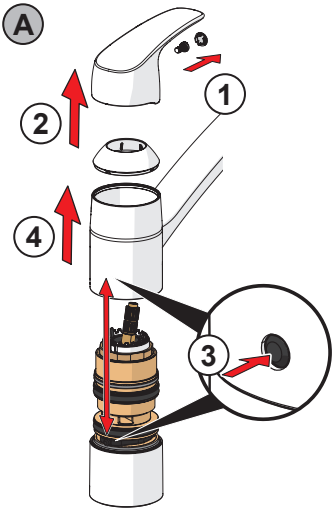
A
1
2
4
3

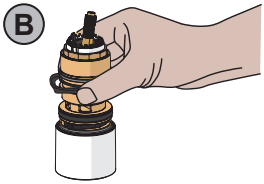
B

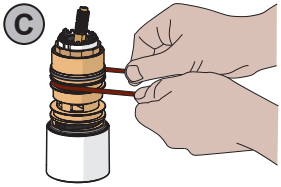
C

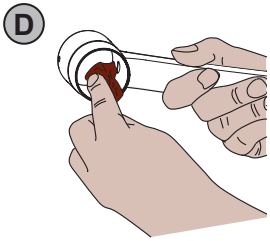
D

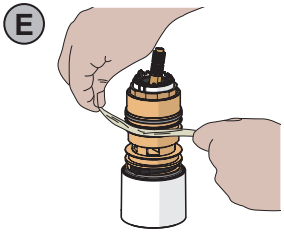
E

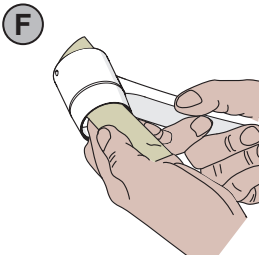
F

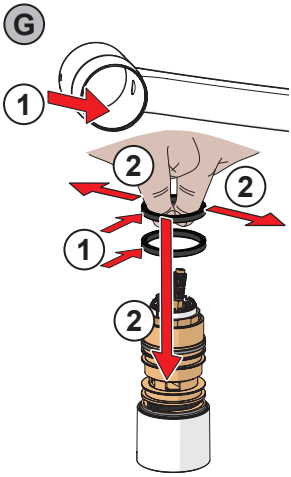
G
1
2
2
1
2

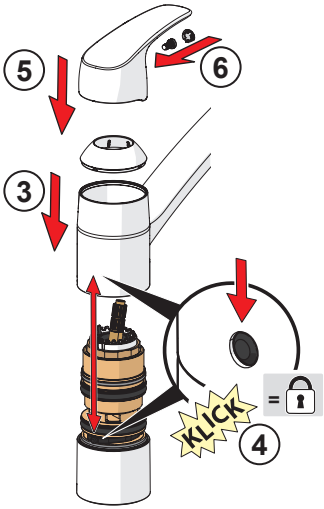
5
6
3
KLICK
=
4

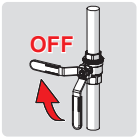

3

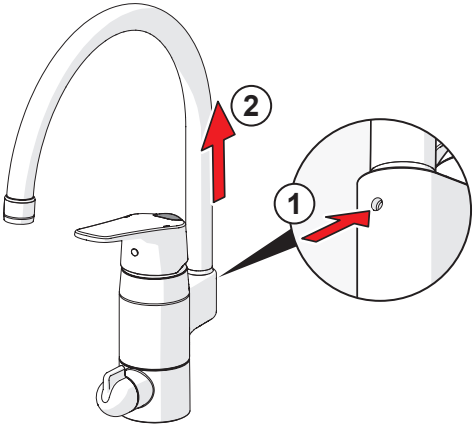

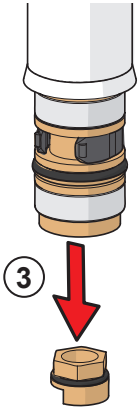

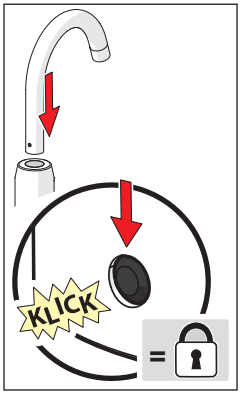

4

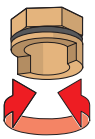

120°

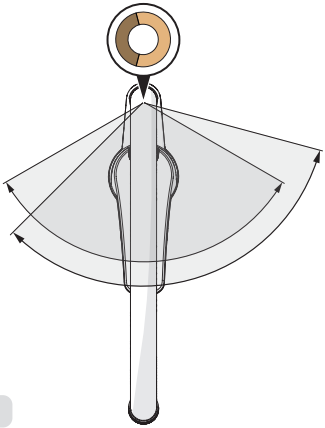

159670/10

4

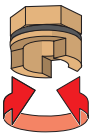

60°/0°

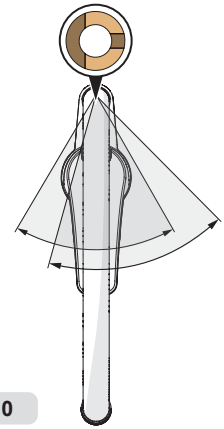

159667/10

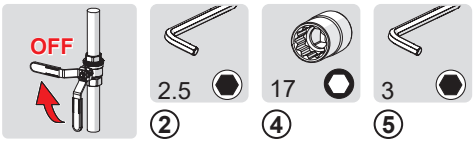

1

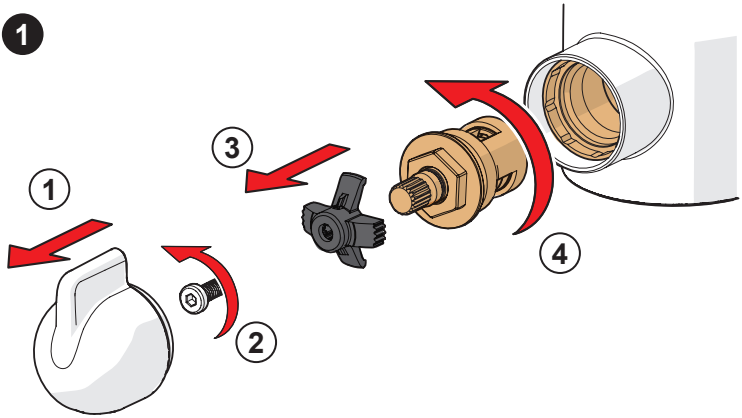

2

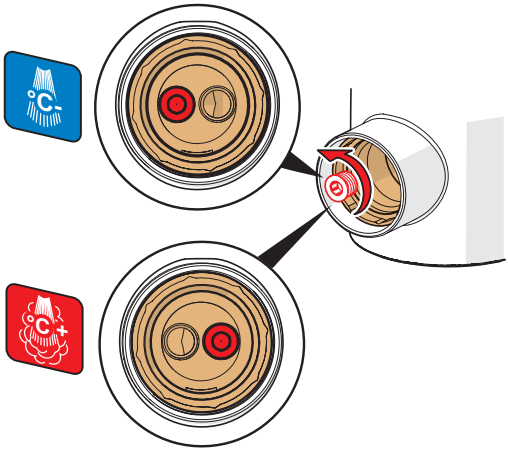

3

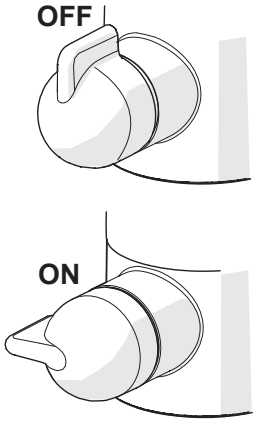

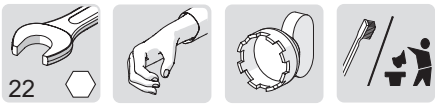

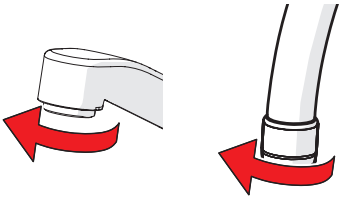

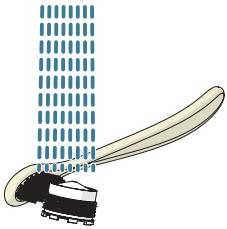

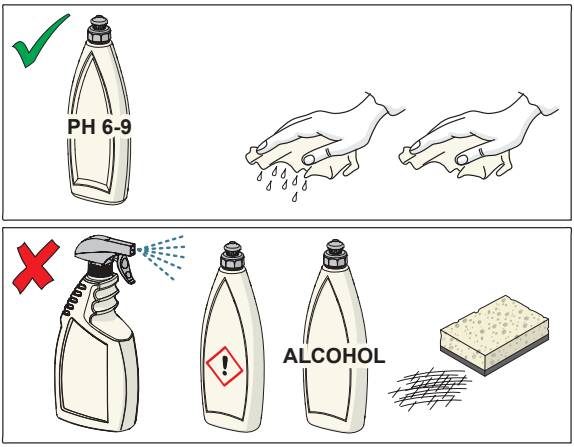

cleaning.oras.com

Oras Group is a powerful European provider of sanitary fittings: the market leader in the Nordics and a leading company in Continental Europe. The company's mission is to make the use of water easy and sustainable and its vision is to become the European leader of advanced sanitary fittings. Oras Group has two strong brands: Oras and Hansa.

The Group's head office is located in Rauma, Finland, and the Group has three manufacturing sites: Kralovice (Czech Republic), Olesno (Poland) and Rauma (Finland). Oras Group employs approximately 1,200 people in twenty countries. Oras Group is owned by Oras Invest, a family company and an industrial owner.

943405-02-21

ORAS Ltd
Isometsäntie 2, P.O. Box 40
FI-26101 Rauma
Tel. +358 2 83 161
Fax +358 2 831 6300
info.finland@oras.com
www.oras.com