Oras

Installation and maintenance guide

4-9

10-13

14

15-18

19-20

1801G

I (ISO 3822)
EN 817
50 - 1000 kPa
0.14 l/s (Eco)
0.21 l/s (300 kPa)
155 kPa (0.1 l/s)
max. +80°C

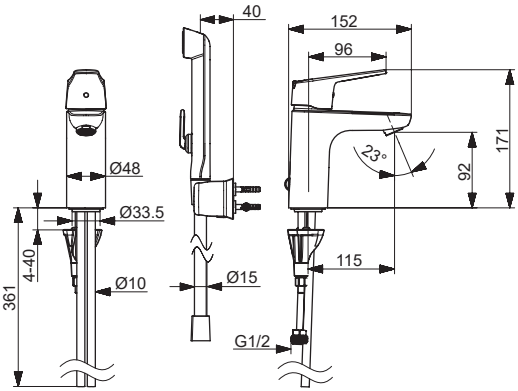

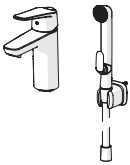

mpi.oras.com/1801G

1801FG

I (ISO 3822)
EN 817
50 - 1000 kPa
0.11 l/s (Eco)
0.14 l/s (300 kPa)
180 kPa (0.1 l/s)
max. +80°C

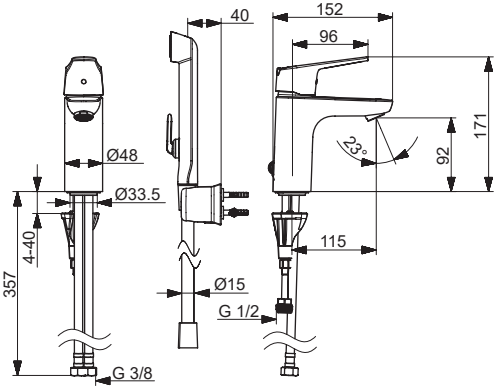

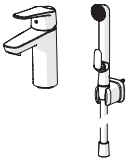

mpi.oras.com/1801FG

1811G

I (ISO 3822)
EN 817
50 - 1000 kPa
0.14 l/s (Eco)
0.21 l/s (300 kPa)
70 kPa (0.1 l/s)
max. +80°C

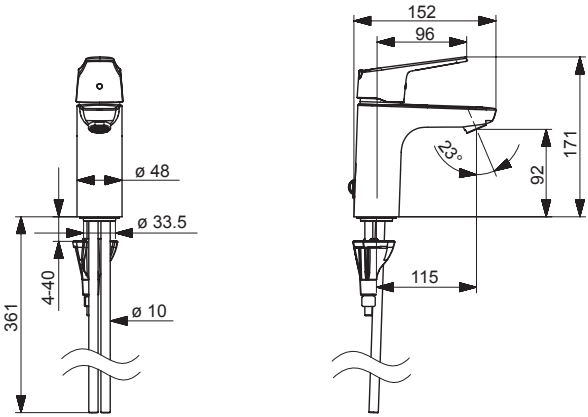

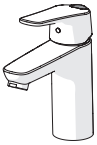

mpi.oras.com/1811G

1811FG , 1811FGG

I (ISO 3822)
EN 817
50 - 1000 kPa
0.11 l/s (Eco)
0.18 l/s (300 kPa)
95 kPa (0.1 l/s)
max. +80°C

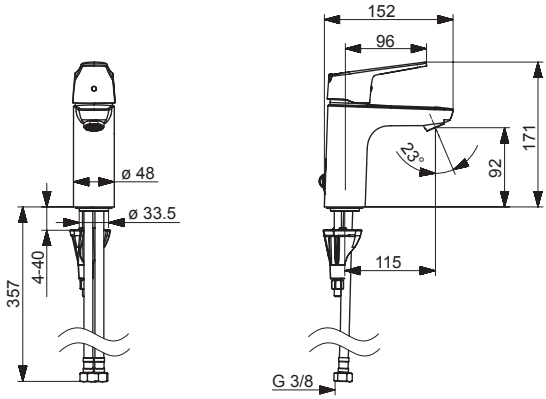

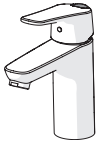

mpi.oras.com/1811FG

1802G

I (ISO 3822)
EN 817
50 - 1000 kPa
0.11 l/s (Eco)
0.15 l/s (300 kPa)
130 kPa (0.1 l/s)
max. +80°C

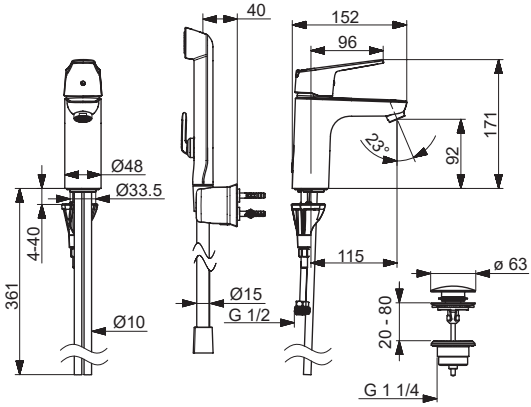

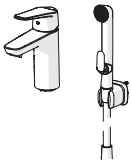

mpi.oras.com/1802G

1802FG

I (ISO 3822)
EN 817
50 - 1000 kPa
0.09 l/s (Eco)
0.13 l/s (300 kPa)
180 kPa (0.1 l/s)
max. +80°C

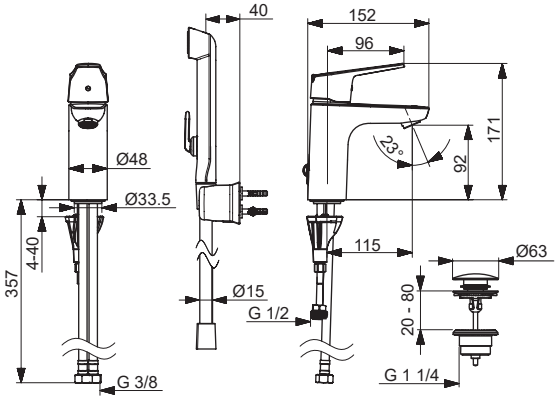

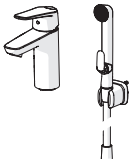

mpi.oras.com/1802FG

1812GM

I (ISO 3822)
EN 817
50 - 1000 kPa
0.11 l/s (Eco)
0.15 l/s (300 kPa)
130 kPa (0.1 l/s)
max. +80°C

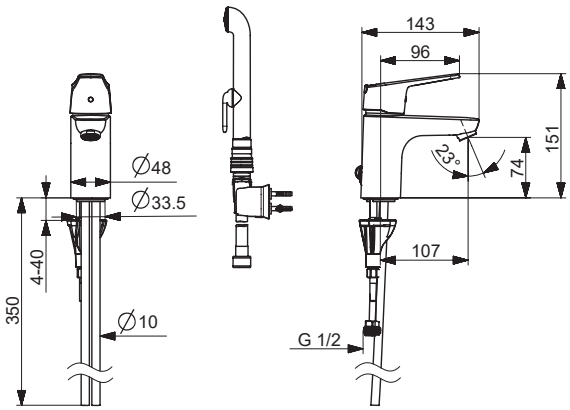

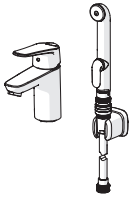

mpi.oras.com/1812GM

1812AG

I (ISO 3822)
EN 817
50 - 1000 kPa
0.11 l/s (Eco)
0.15 l/s (300 kPa)
130 kPa (0.1 l/s)
max. +80°C

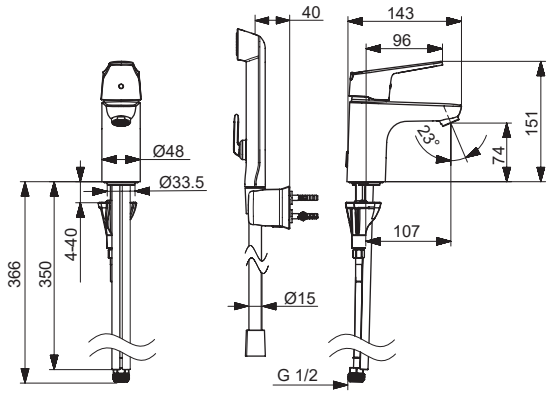

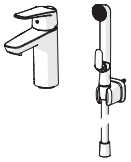

mpi.oras.com/1812AG

1812G

I (ISO 3822)
EN 817
50 - 1000 kPa
0.11 l/s (Eco)
0.15 l/s (300 kPa)
130 kPa (0.1 l/s)
max. +80°C

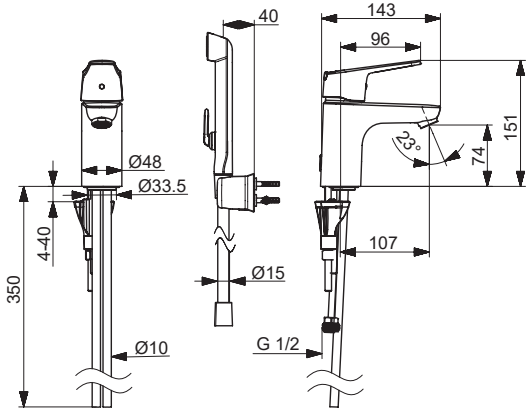

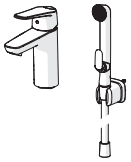

mpi.oras.com/1812G

1812FG , 1812FG-33 , 1812FGG

I (ISO 3822)
EN 817
50 - 1000 kPa
0.09 l/s (Eco)
0.13 l/s (300 kPa)
195 kPa (0.1 l/s)
max. +80°C

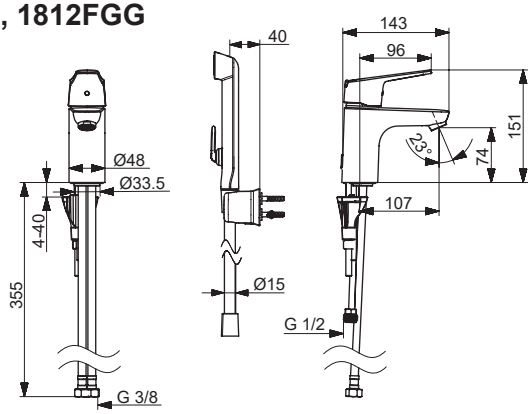

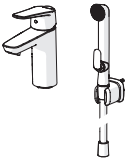

mpi.oras.com/1812FG

1810G , 1810GK

I (ISO 3822)
EN 817
50 - 1000 kPa
0.14 l/s (Eco)
0.21 l/s (300 kPa)
70 kPa (0.1 l/s)
max. +80°C

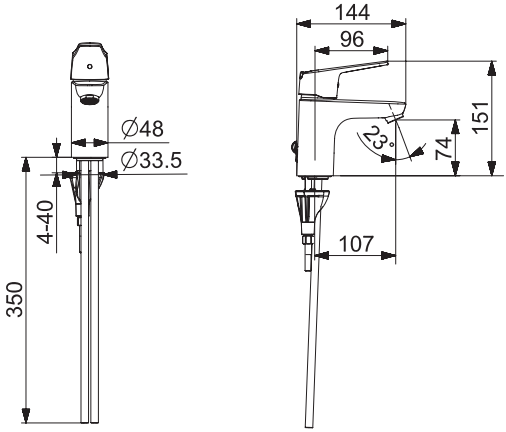

mpi.oras.com/1810G

1810FG , 1810FG-33 , 1810FGG

I (ISO 3822)
EN 817
50 - 1000 kPa
0.11 l/s (Eco)
0.18 l/s (300 kPa)
110 kPa (0.1 l/s)
max. +80°C

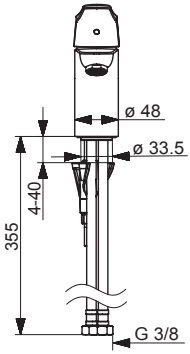

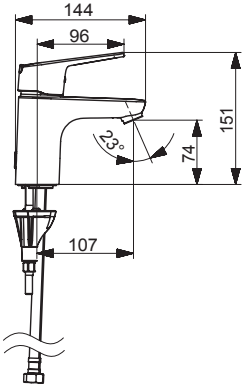

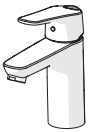

mpi.oras.com/1810FG

1813G

I (ISO 3822)
EN 817
50 - 1000 kPa
0.15 l/s (Eco)
0.2 l/s (300 kPa)
75 kPa (0.1 l/s)
max. +80°C

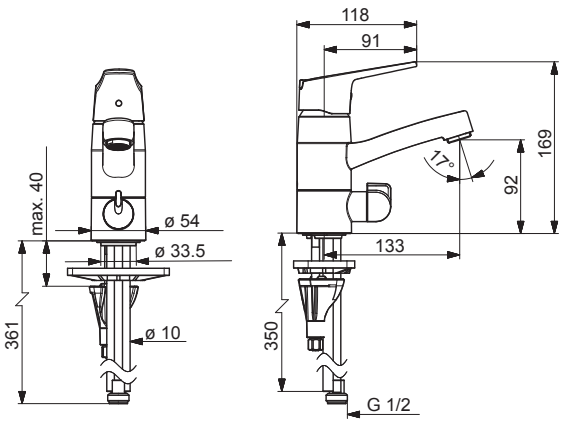

mpi.oras.com/1813G

1813FG

I (ISO 3822)
EN 817
50 - 1000 kPa
0.15 l/s (Eco)
0.2 l/s (300 kPa)
75 kPa (0.1 l/s)
max. +80°C

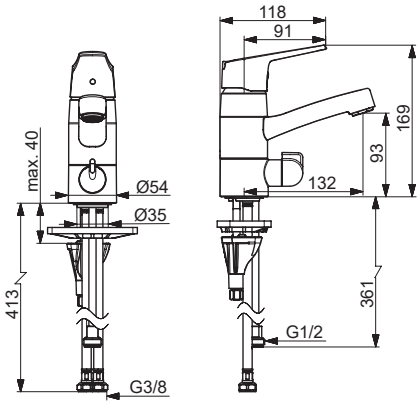

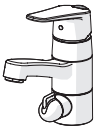

mpi.oras.com/1813FG

1814G

I (ISO 3822)
EN 817
50 - 1000 kPa
0.12 l/s (Eco)
0.15 l/s (300 kPa)
130 kPa (0.1 l/s)
max. +80°C

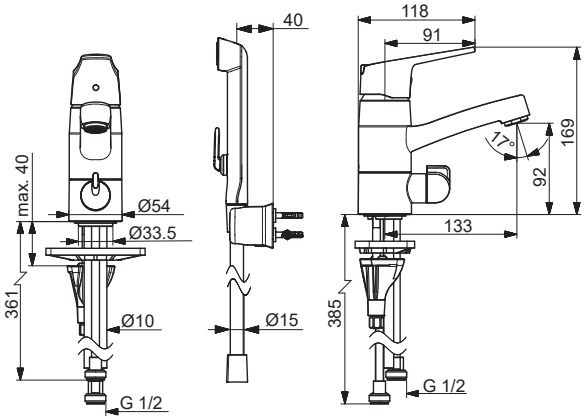

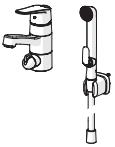

mpi.oras.com/1814G

1814FG, 1814FG-33

I (ISO 3822)
EN 817
50 - 1000 kPa
0.12 l/s (Eco)
0.15 l/s (300 kPa)
130 kPa (0.1 l/s)
max. +80°C

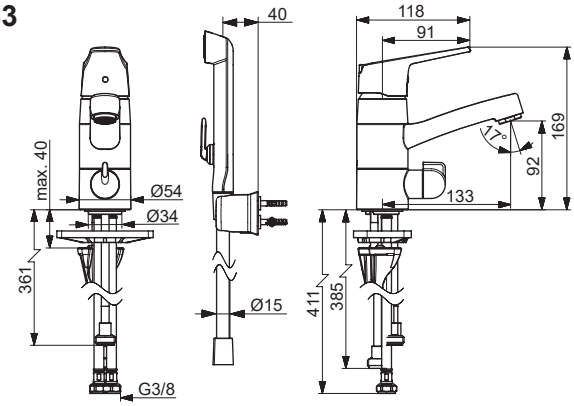

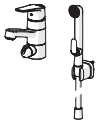

mpi.oras.com/1814FG

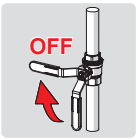

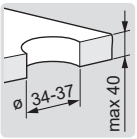

4

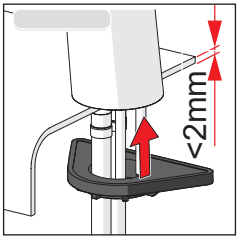

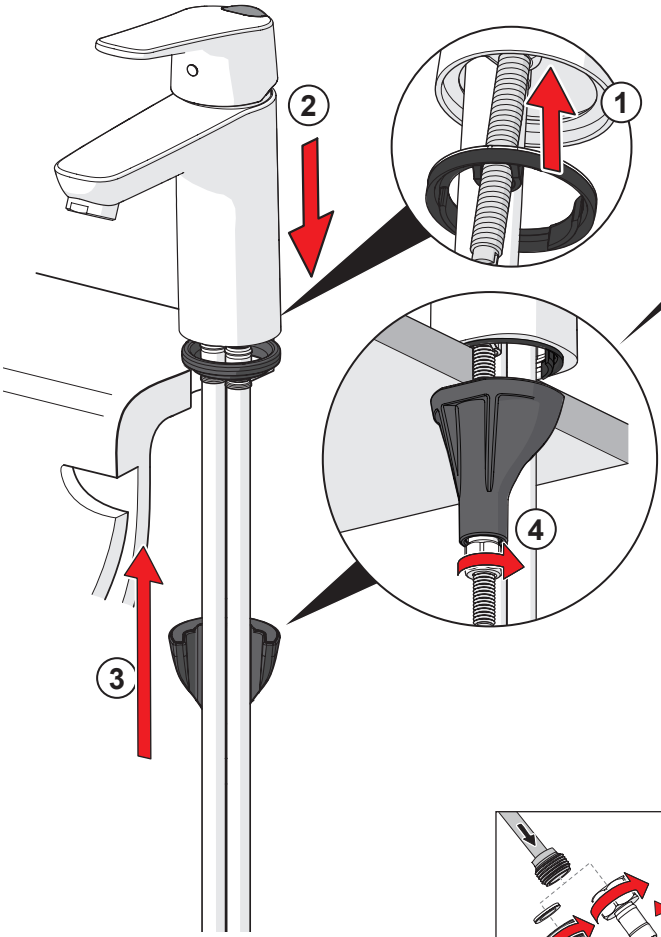

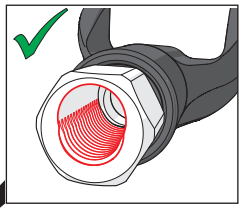

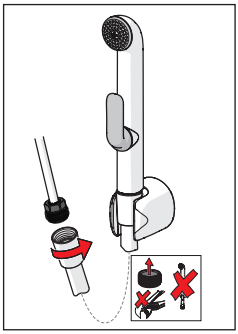

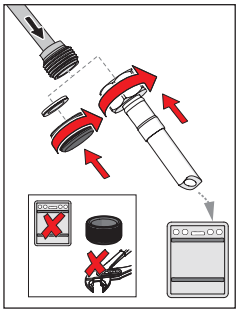

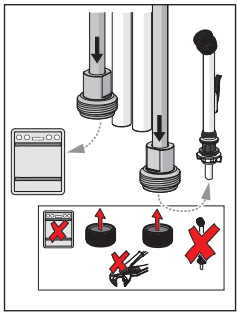

1

max.
1600 kPa

2

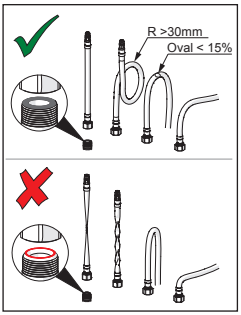

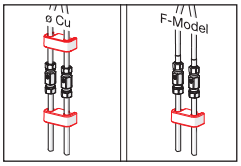

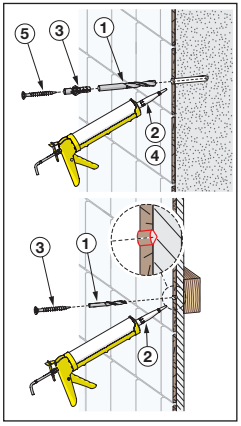

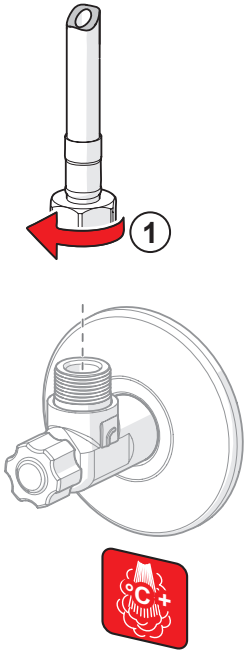

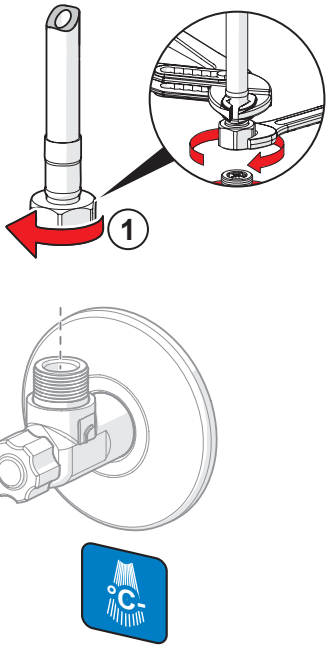

①②

❷ 1812GM

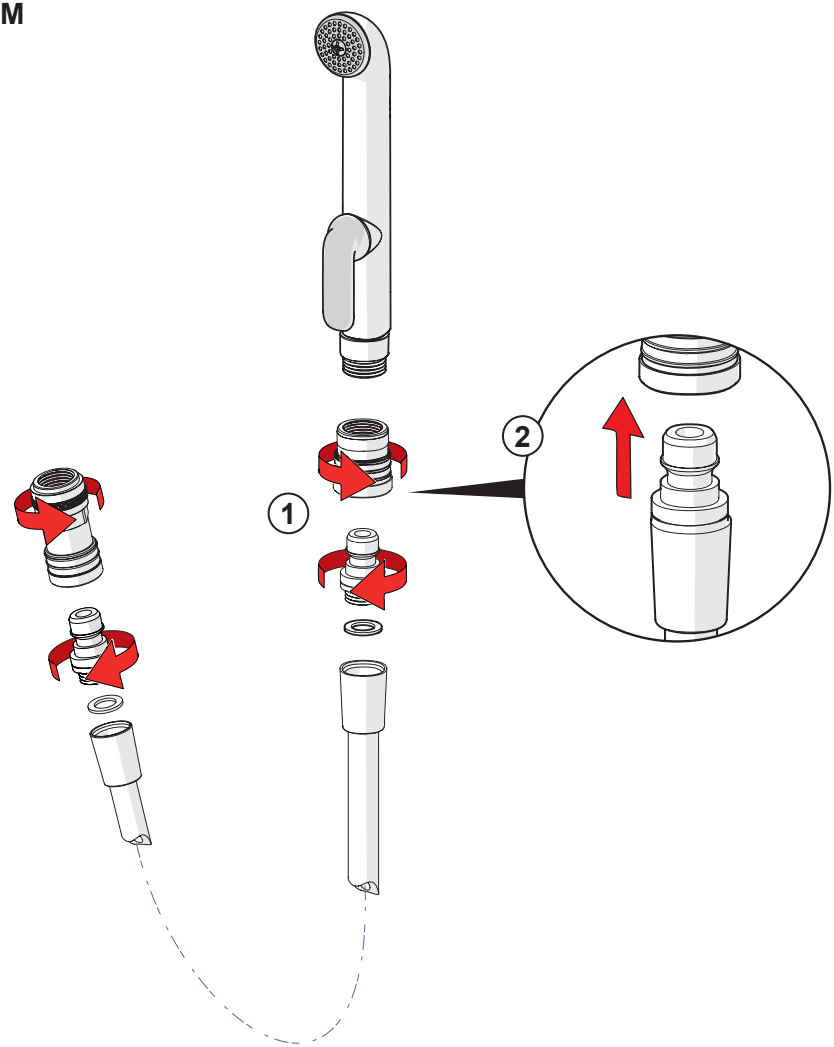

① ③ ②

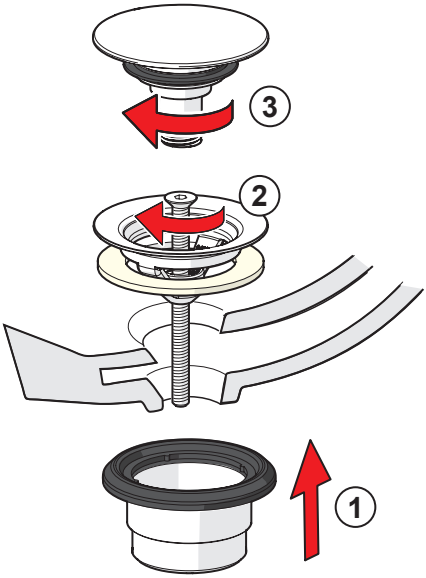

①

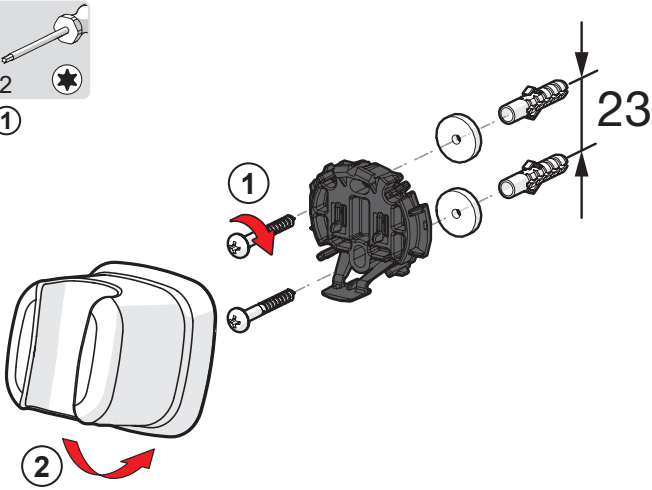

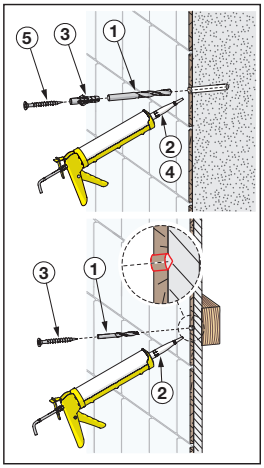

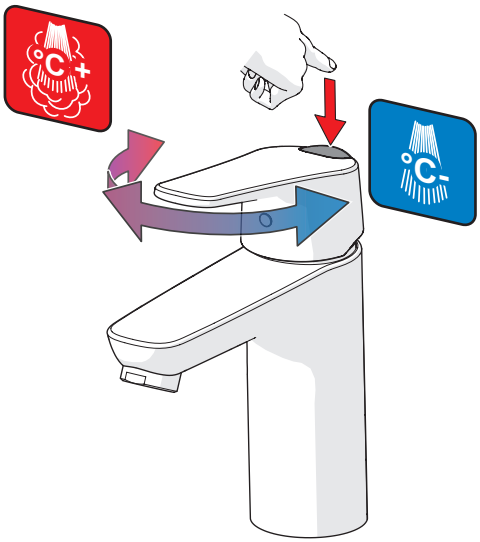
°C+
°C-

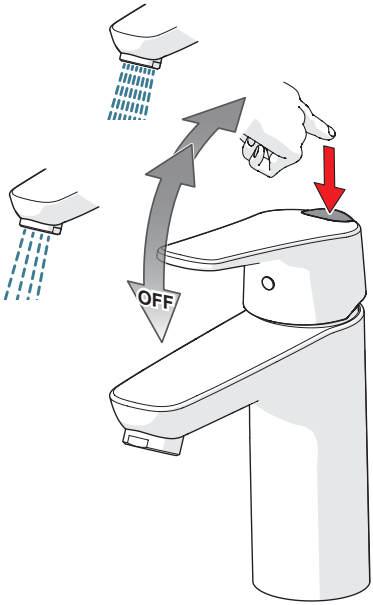
OFF

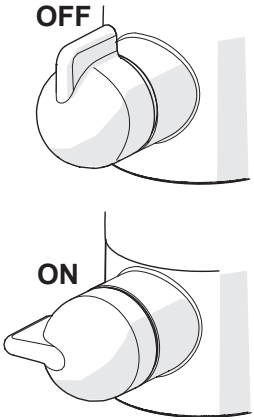
OFF
ON

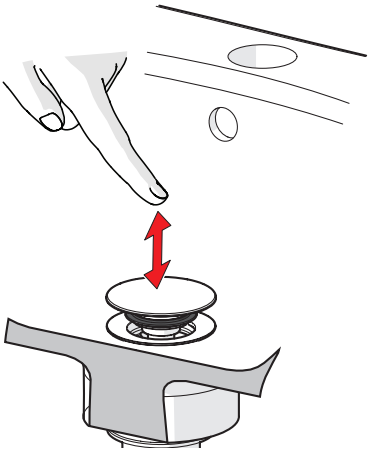

②

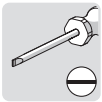

③⑤⑥

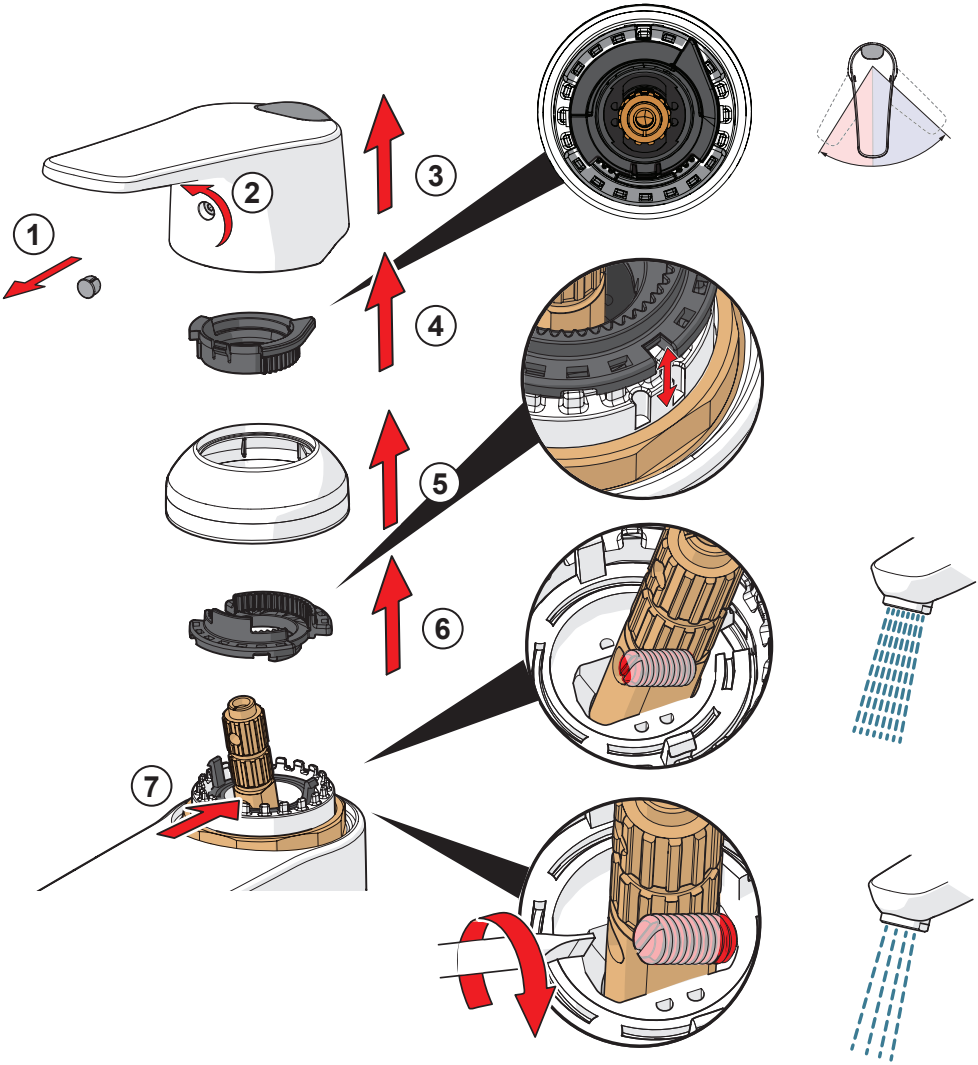

②

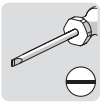

④

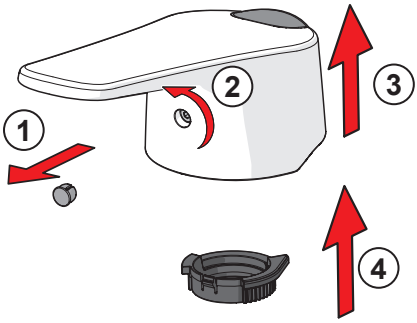

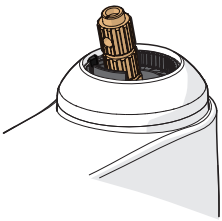

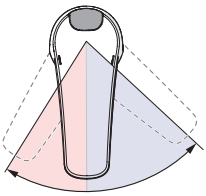

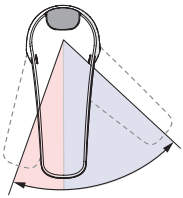

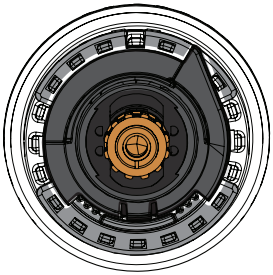

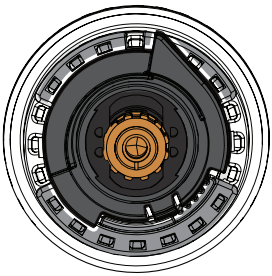

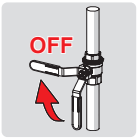

②

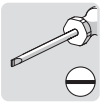

④⑥

⑦

⑨

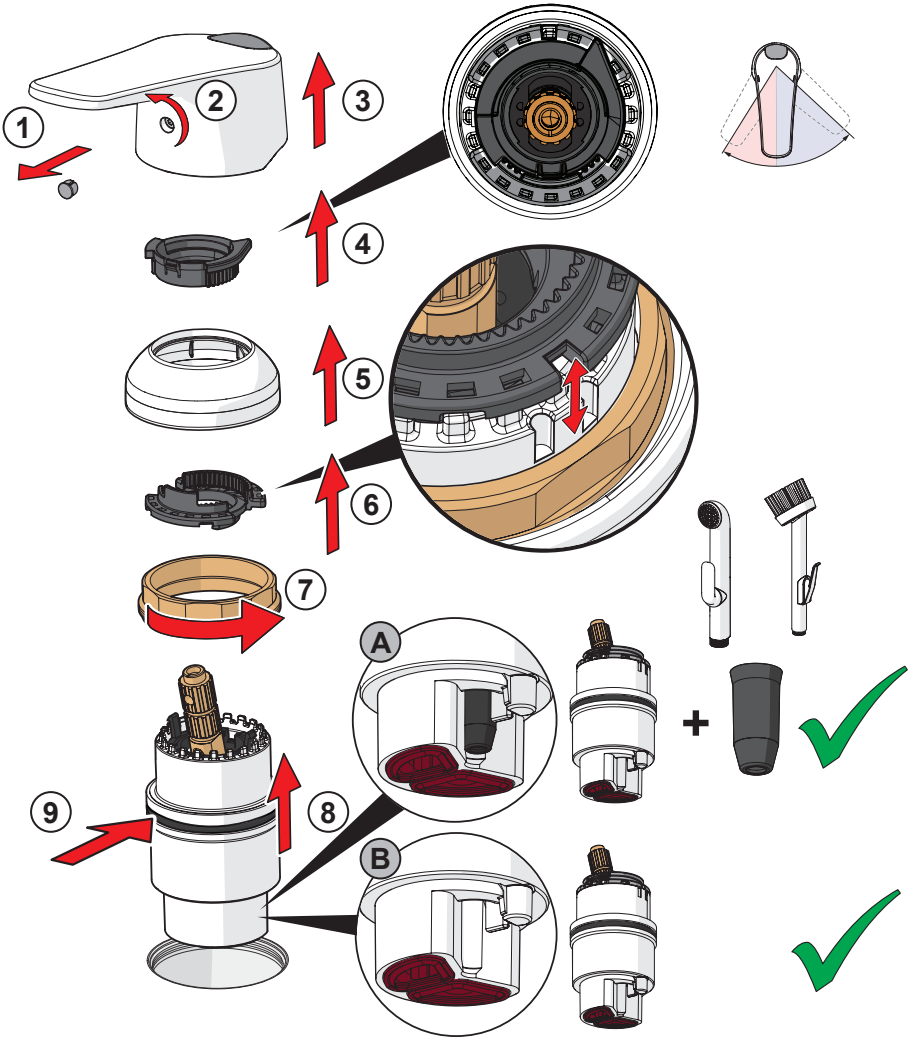

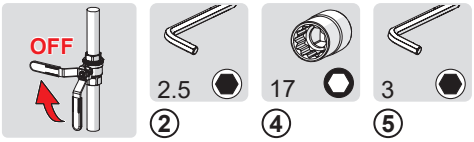

1

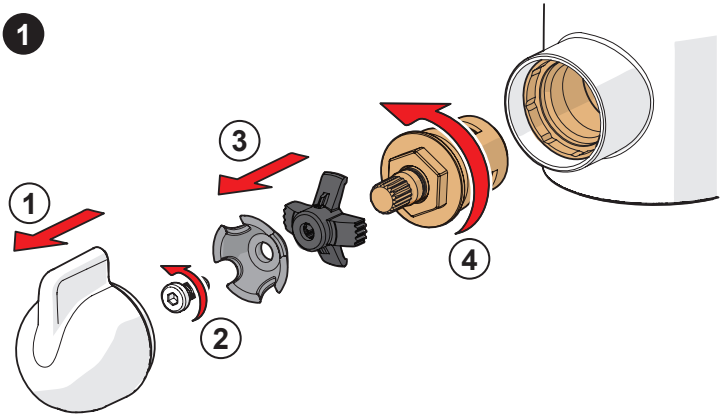

2

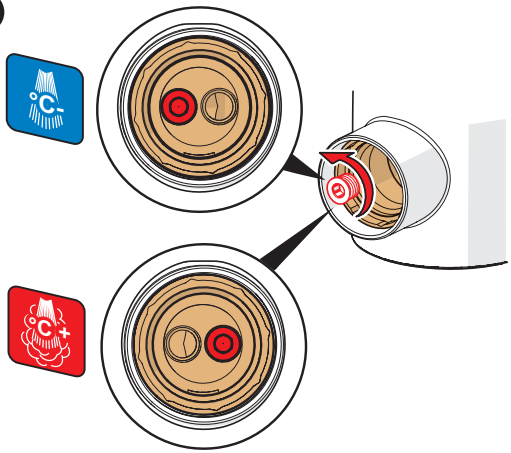

3

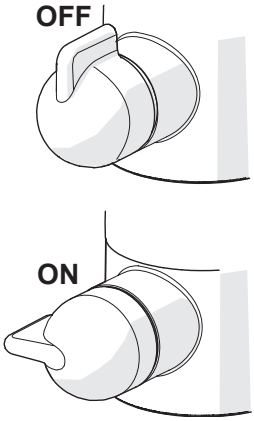

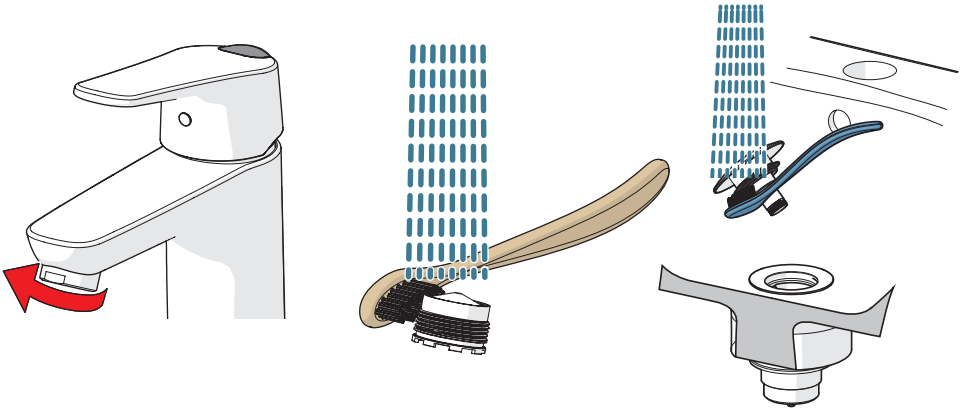

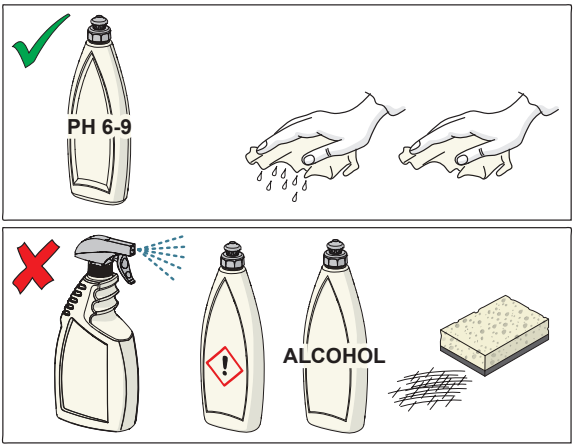

cleaning.oras.com

1812GM

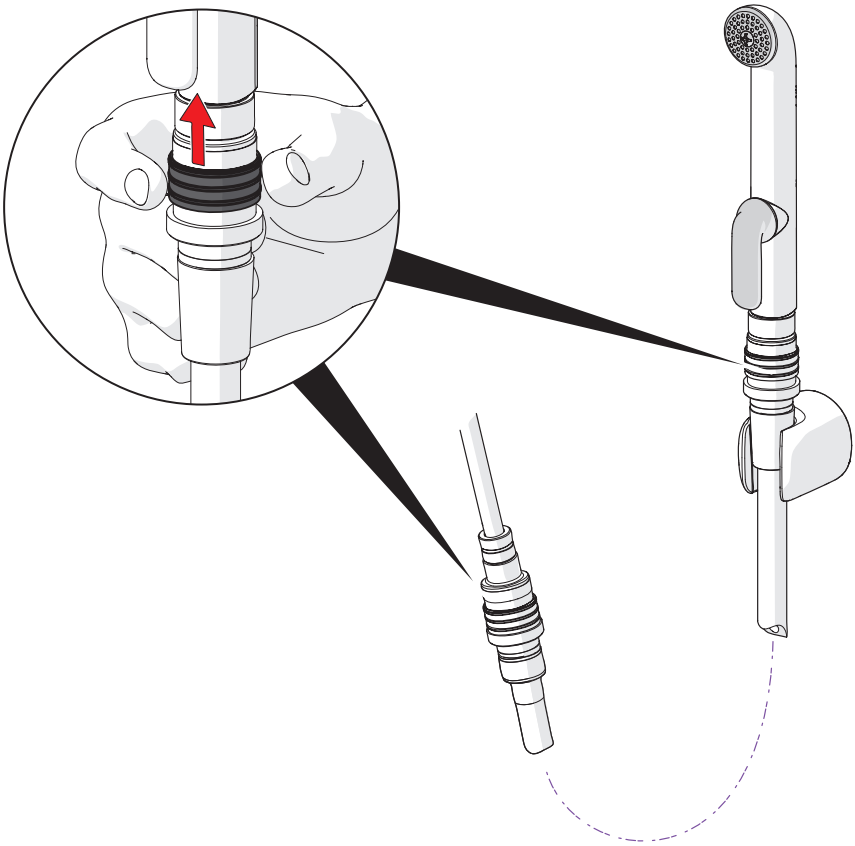

About Oras Group

Oras Group is a significant European provider of sanitary fittings: the market leader in the Nordics and a leading company in Continental Europe. The company's mission is to create the smartest water experiences for everyone and its vision is to become the Perfect Flow Company. The Group has two strong brands, Oras and Hansa. Oras Group is owned by Oras Invest, a family company, and an industrial owner.

The domicile of Oras Ltd, the parent company of the Group, is located in Rauma, Finland, and the Group has three manufacturing sites: Kralovice (Czech Republic), Olesno (Poland) and Rauma (Finland). The Group operates with its own staff in 17 markets. Oras Group's net sales were 233.5 million euros in 2021 and at the end of the period the company employed 1255 people.

943404-08-23

ORAS Ltd
Isometsäntie 2, P.O. Box 40
FI-26101 Rauma
Tel. +358 2 83 161
Fax +358 2 831 6300
info.finland@oras.com
www.oras.com