TECEnow (2003 – 2020) + (2021, ...)

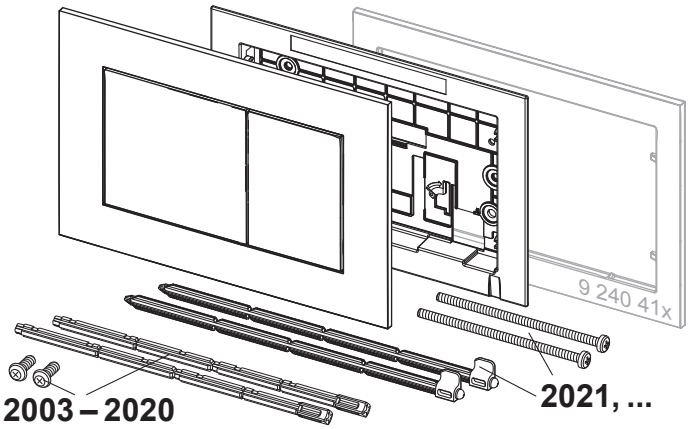

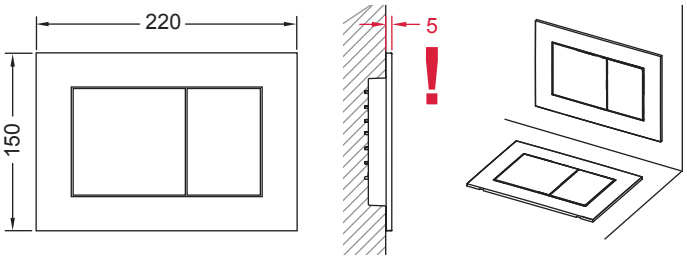

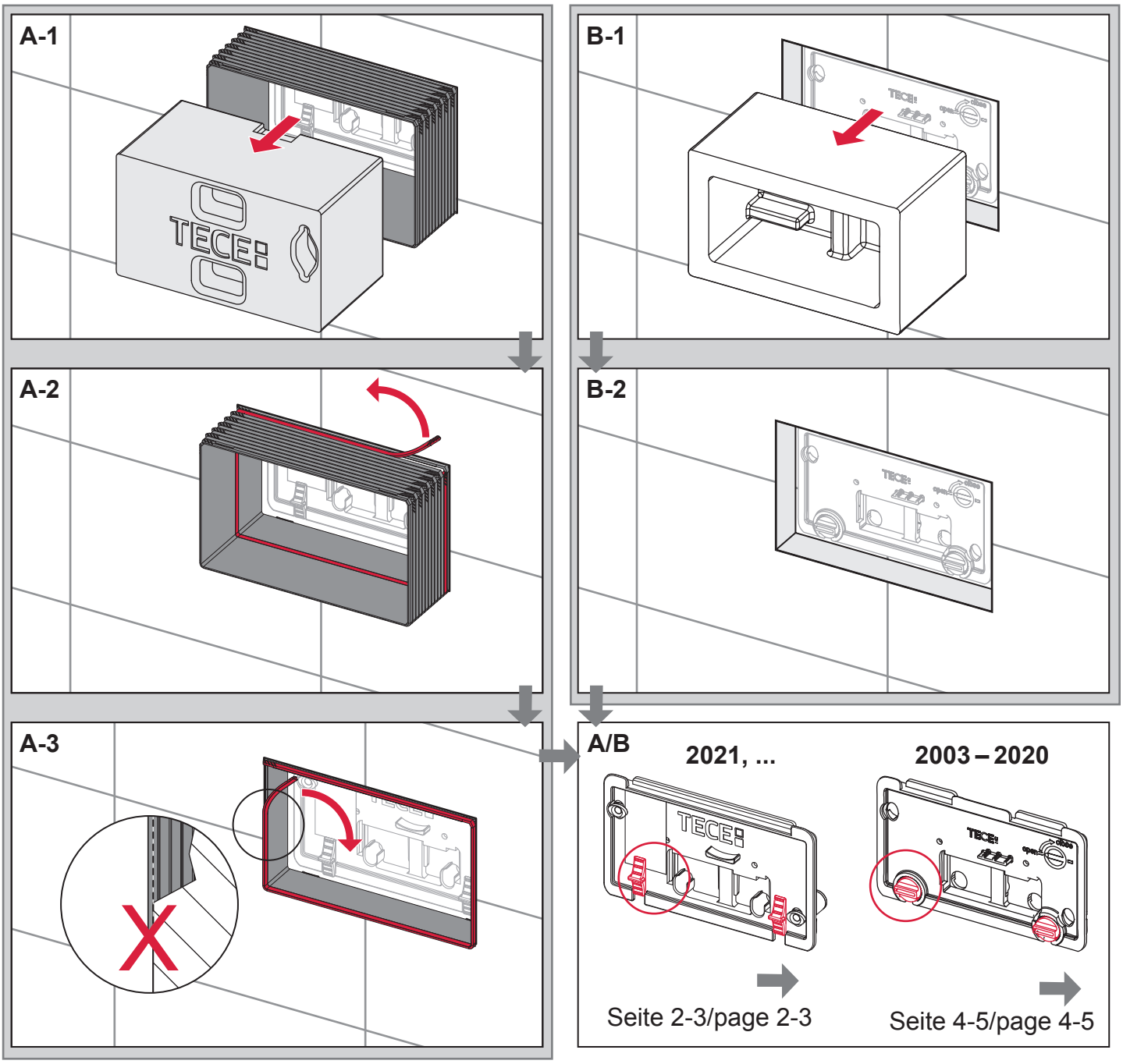

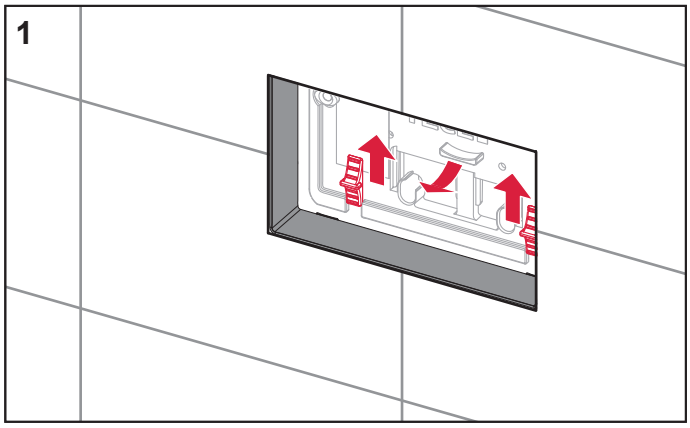
1

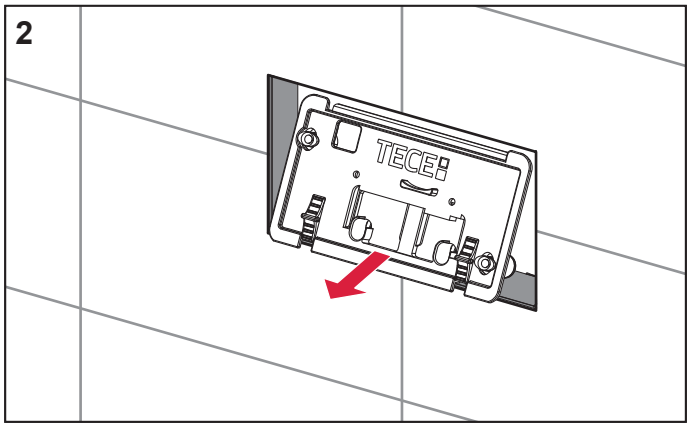
2
TECE

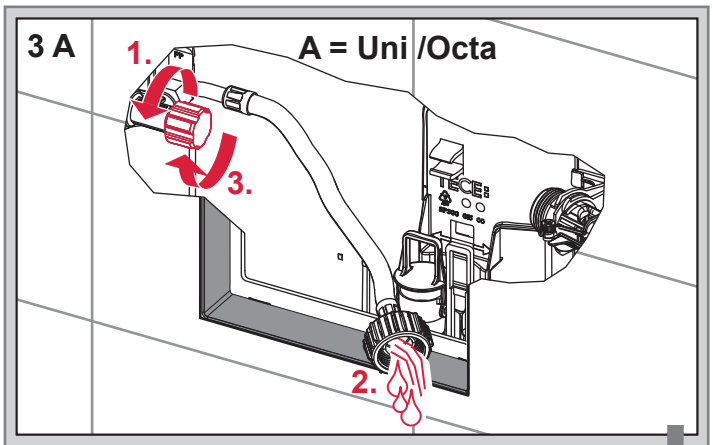
3 A
A = Uni /Octa
1.
3.
2.

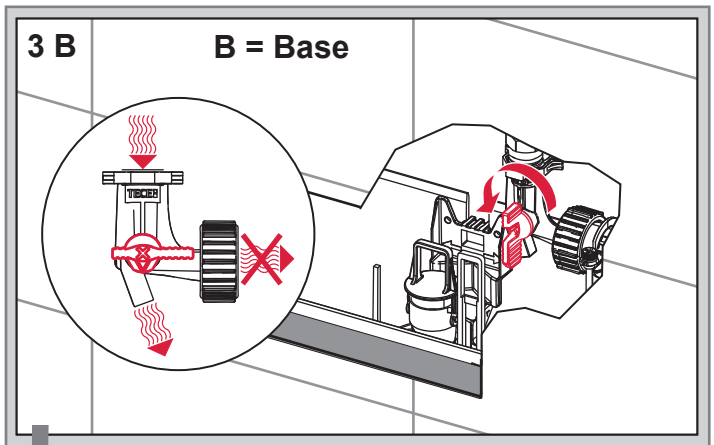
3 B
B = Base

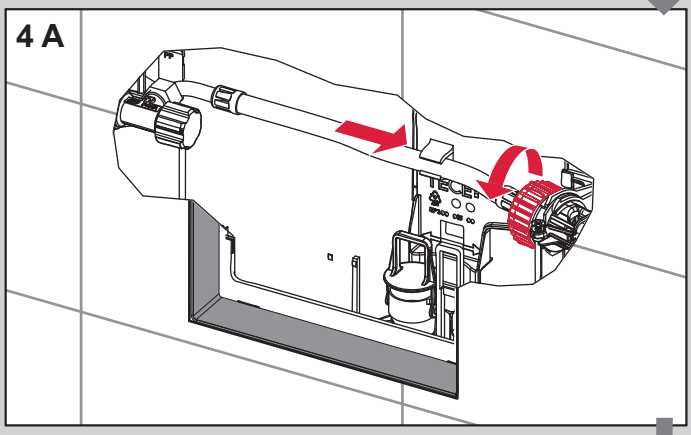
4 A

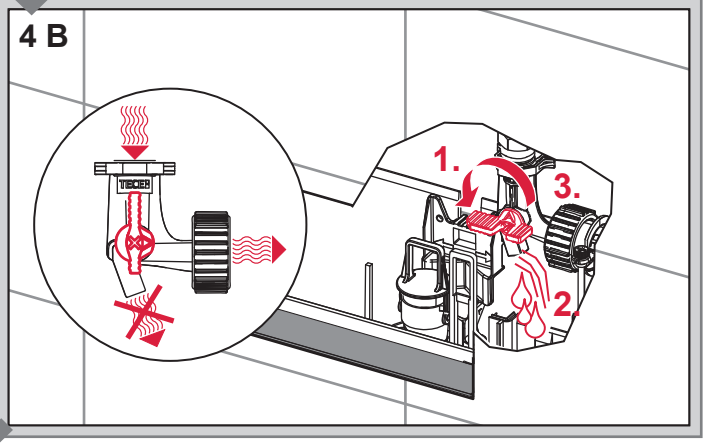
4 B
1.
3.
2.

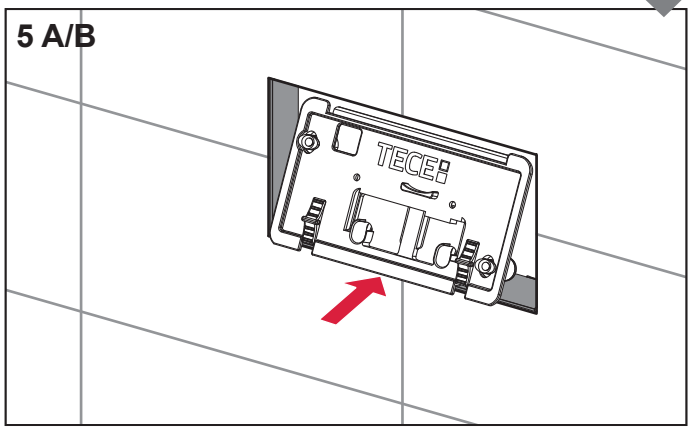
5 A/B
TECE

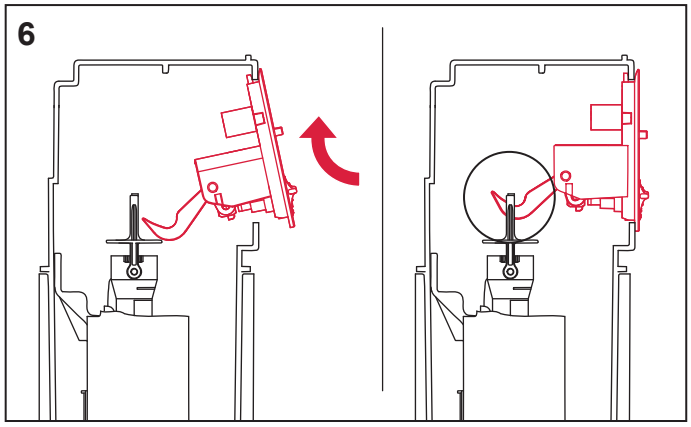
6

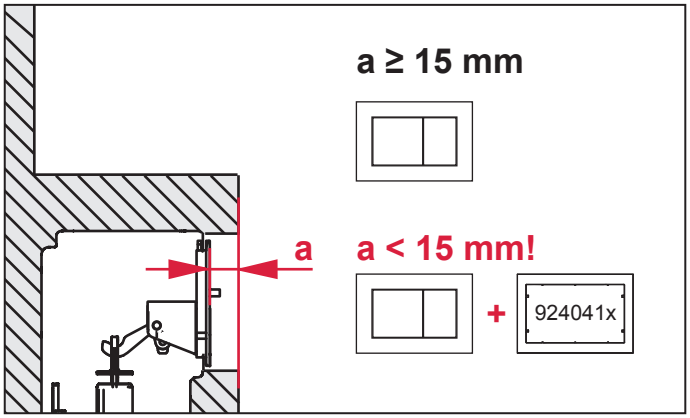
a ≥ 15 mm
a
a < 15 mm!
+
924041x

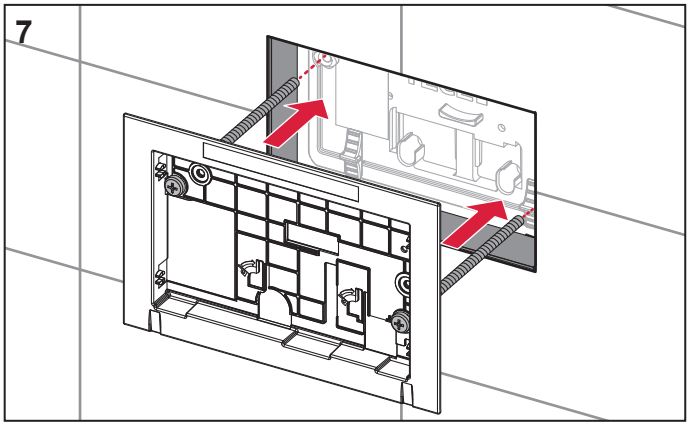
7

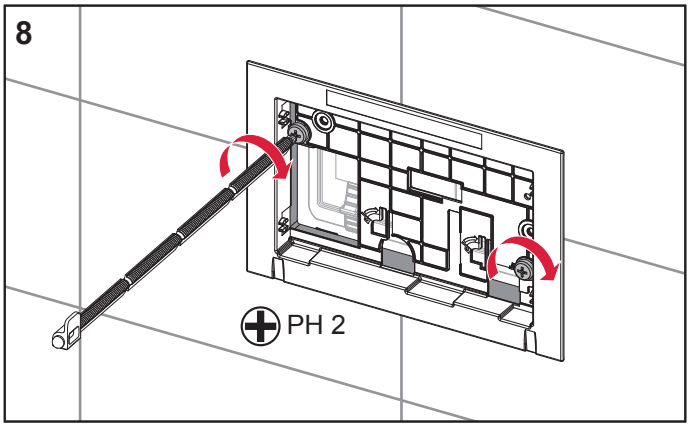
8
PH 2

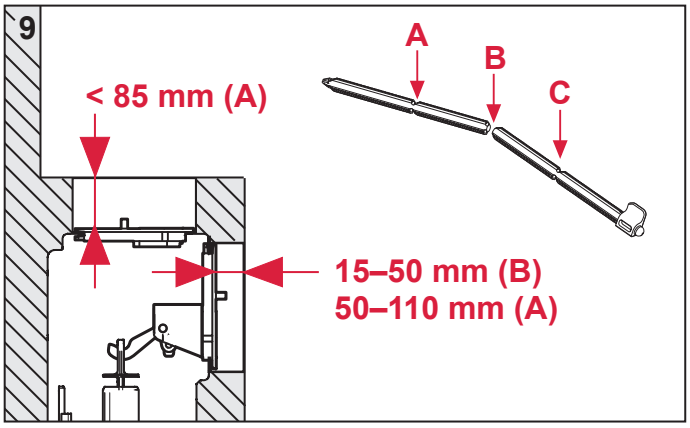
9
< 85 mm (A)
A
B
C
15–50 mm (B)
50–110 mm (A)

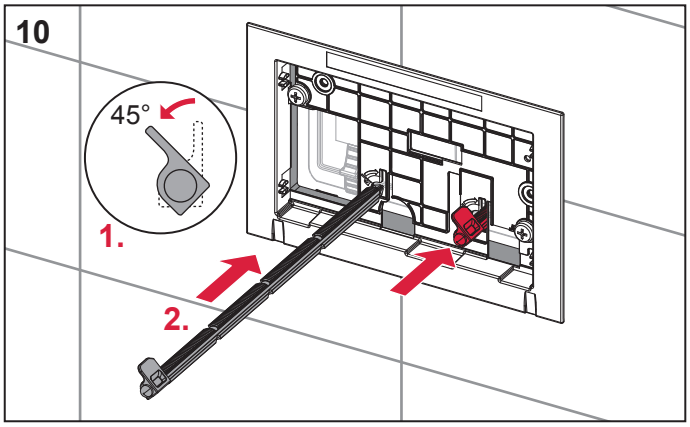
10
45°
1.
2.

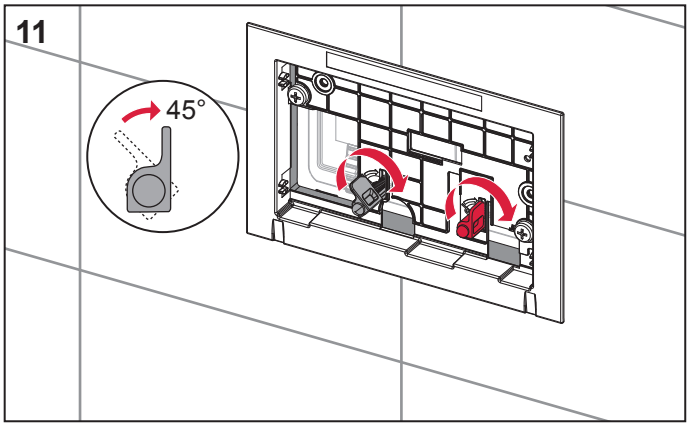
11
45°

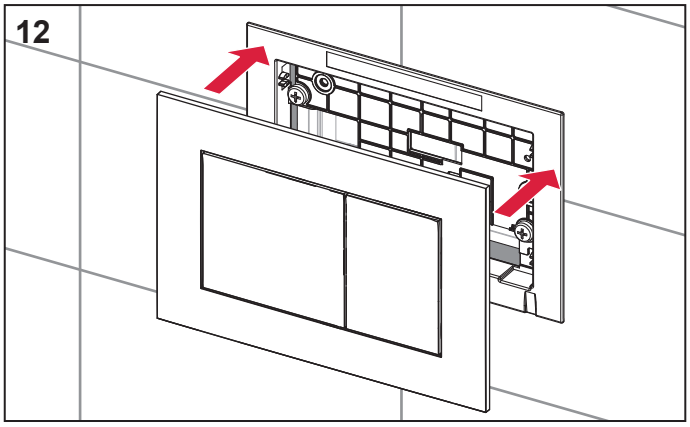
12

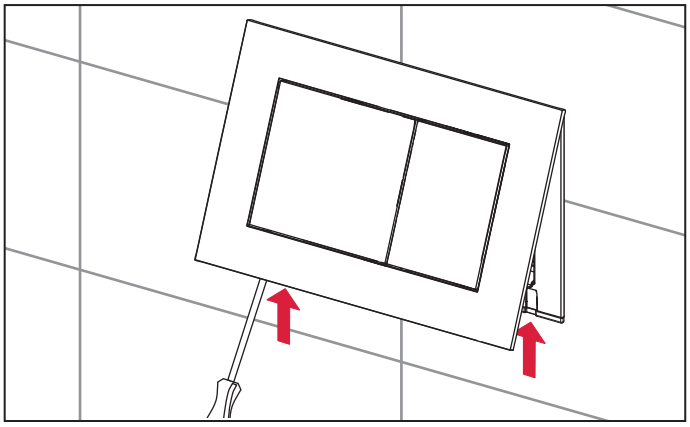

TECEnow (2003 – 2020)

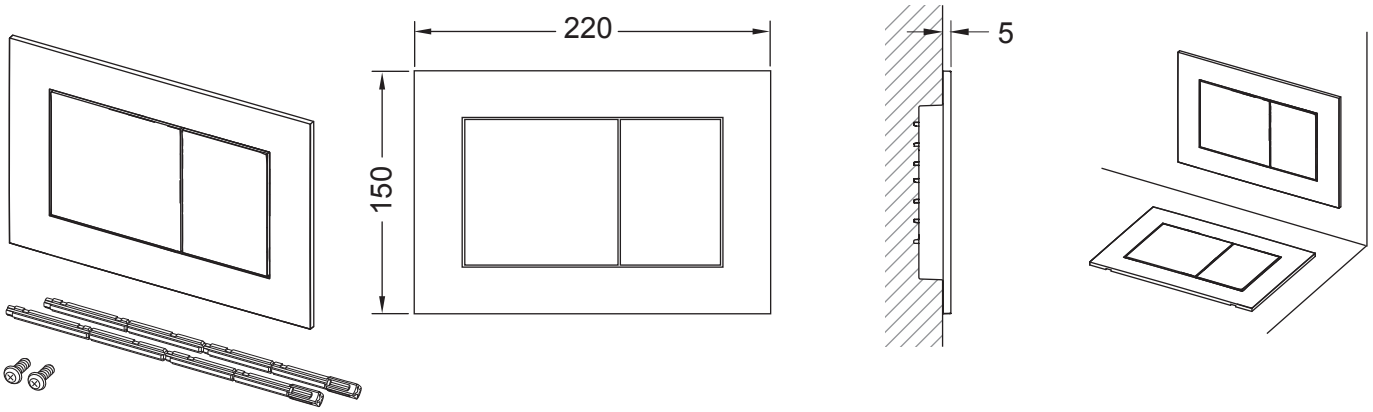

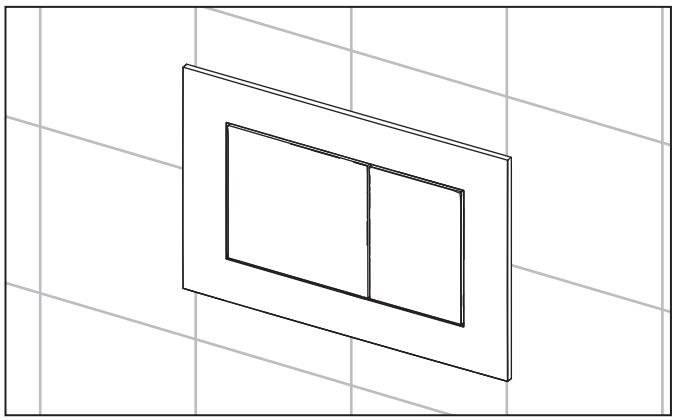

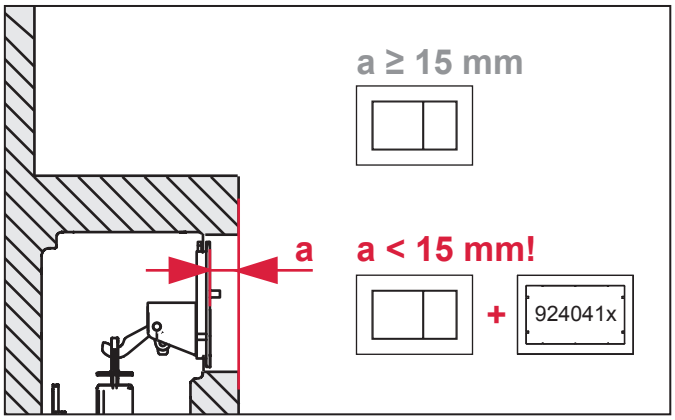

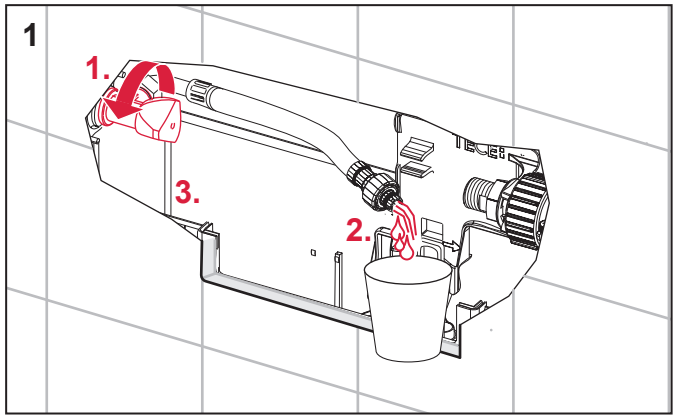

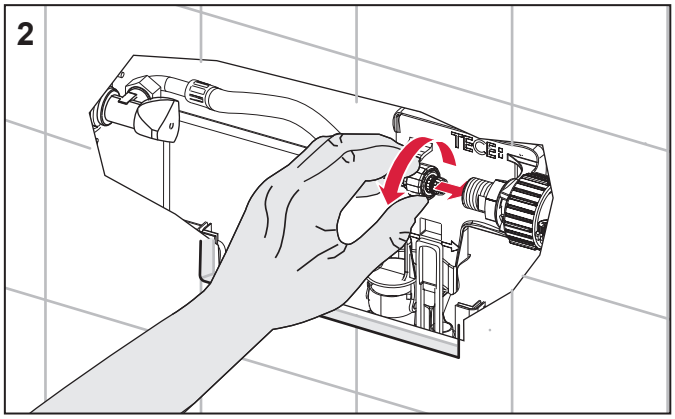

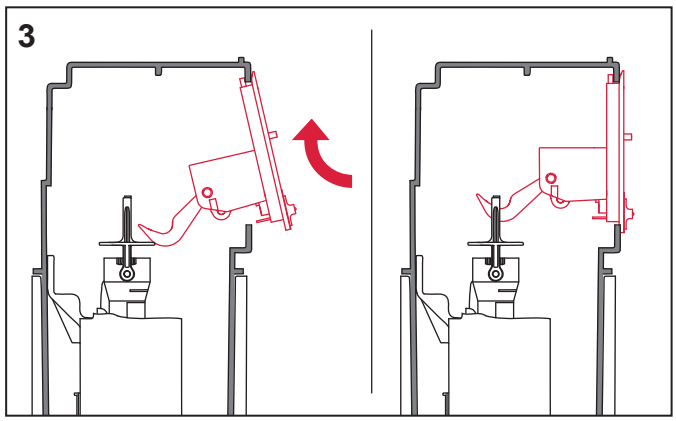

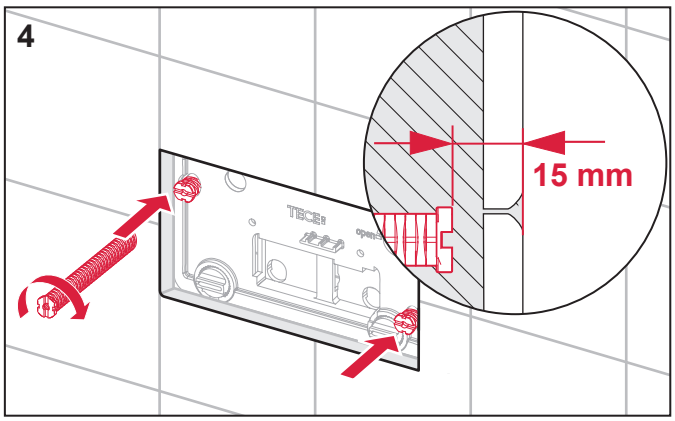

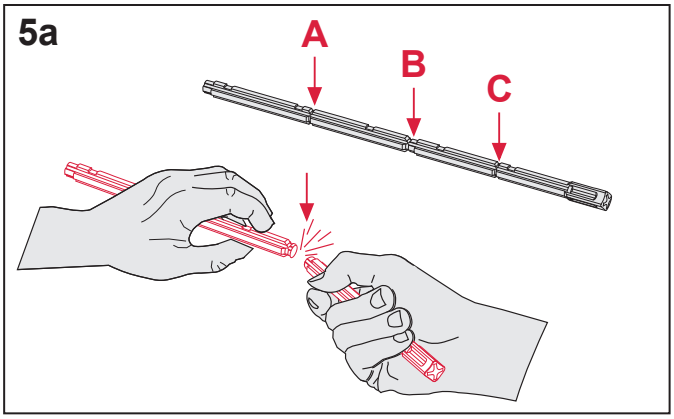
5a
A
B
C

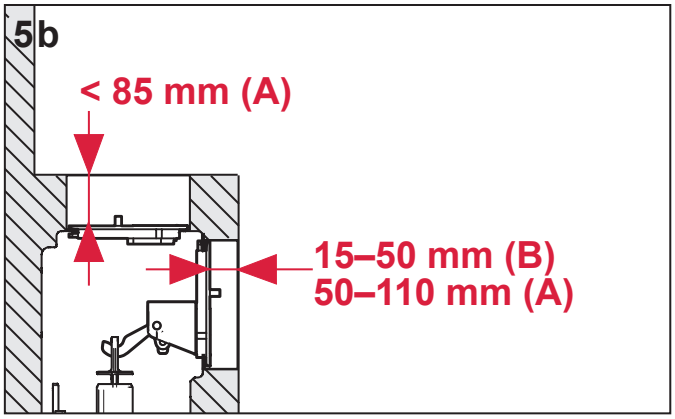
5b
< 85 mm (A)
15–50 mm (B)
50–110 mm (A)

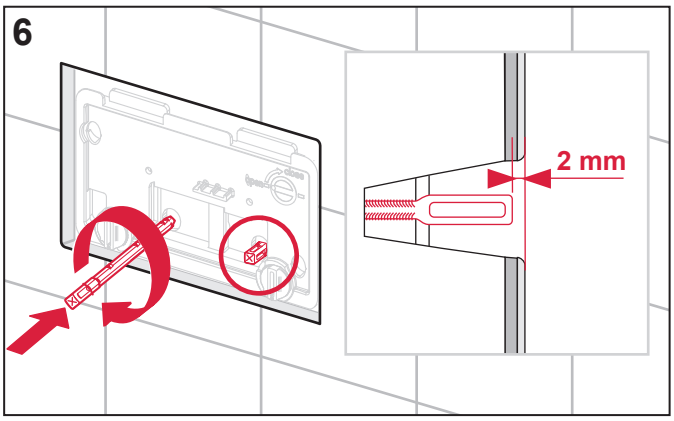
6
2 mm

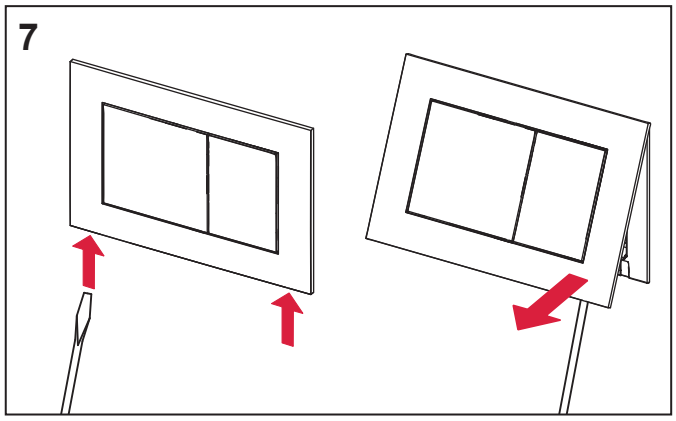
7

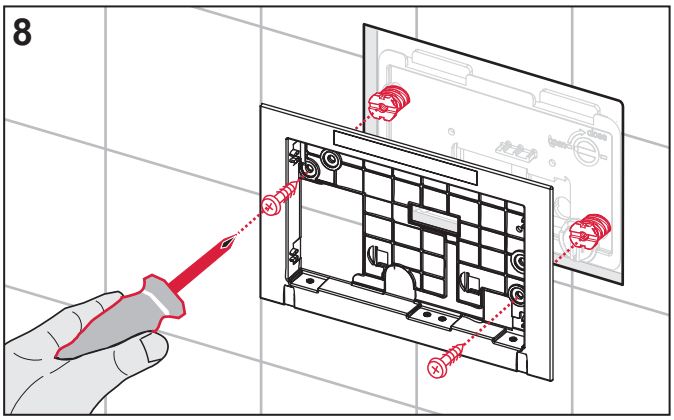
8

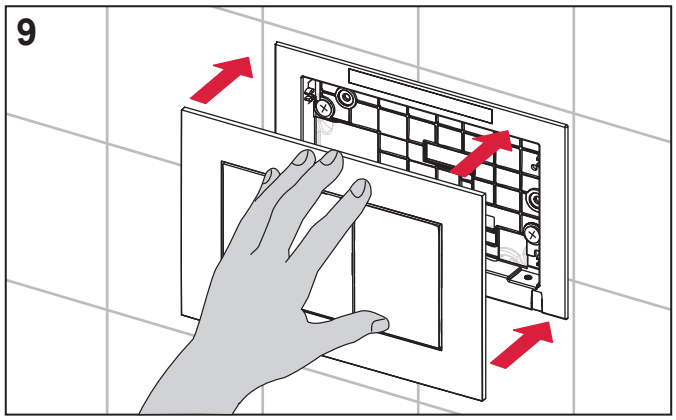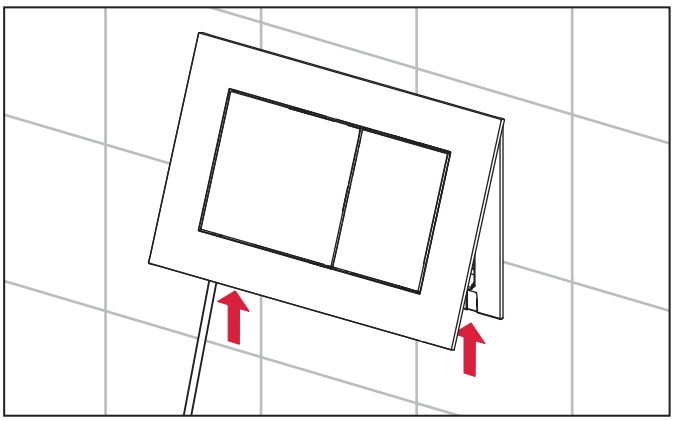
9